SUZUKI MOTOR CO., LTD.

Head Office:
P.O.Box 116, Hamamatsu 430, Japan
Tokyo Branch:
2-2-8, Higashi-Shinbashi, Minato-ku Tokyo 105, Japan
U.S.SUZUKI MOTOR CORPORATION:
13767 Freeway Drive, Santa Fe Springs,
California 90670 U.S.A

SUZUKI
PARTS CATALOGUE

SUZUKI
LJ10

SUZUKI MOTOR CO.,LTD.

Head Office P.O.Box 116. Hamamatsu Japan

SUZUKI LJ10 PARTS CATALOGUE

Printed in March, 1972.
Published in March, 1972.
Editor : SUZUKI MOTOR Co., LTD.
Export parts section

Reprint Prohibited

SUZUKI LJ10

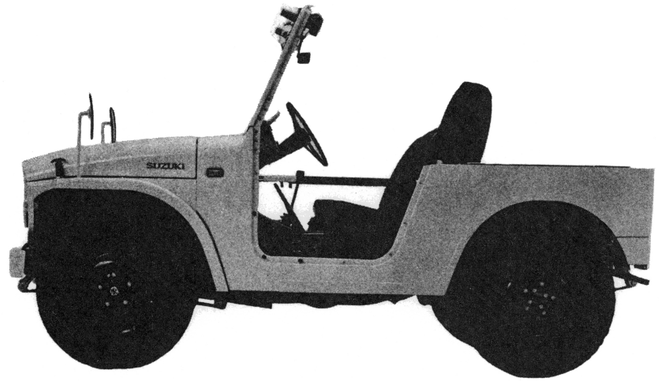

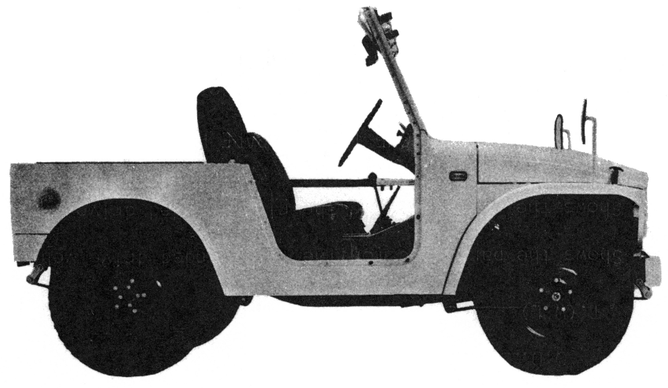

PREFACE

When it becomes neccessary to replace parts on SUZUKI Vehicle, always use SUZUKI GENUINE PARTS which have passed a strict inspection which guarantees quality and performance.

This parts catalogue covers the list of all service parts for SUZUKI LJ10.

A. INSTRUCTIONS FOR QUOTING THE CATALOGUE

1. COMPOSITION OF THE PART NUMBER

1-1. REGULAR PARTS

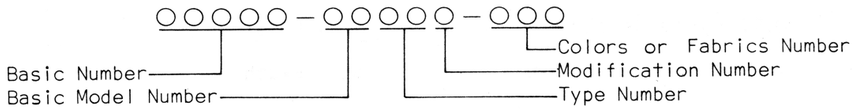

1-2. STANDARD PARTS

Numbers of all standard parts begin with 0 except beginning with 09 or 000.

1-3. SPECIAL STANDARD PARTS

Special standard parts are parts which are similar to standard parts but differ in some respect. All special standard parts numbers begin with 09 except 099.

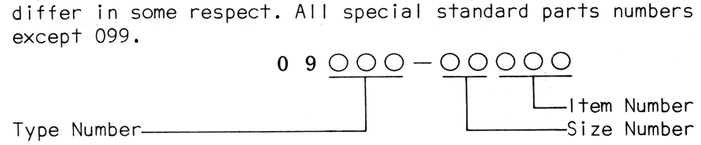

1-4. PARTS ASSEMBLIES

The eight digit of numbers of parts assemblies is always 8.

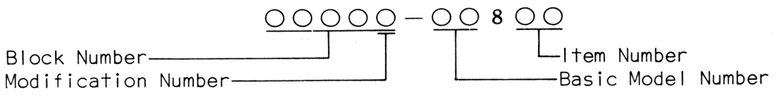

1-5. SPECIAL TOOLS

Part Numbers begin with 099.

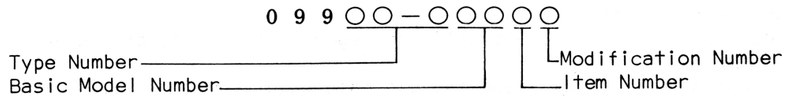

1-6. MISCELLANEOUS

Part numbers begin with 99000.

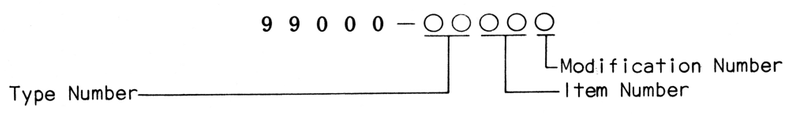

2. DIMENSIONS

Dimensions of the parts in this catalogue are indicated in unit millimeters.

3. ABBREVIATIONS

Abbreviations used in this catalogue are as follows;

I.D. : Inside diameter	T. : Thickness
O.D. : Outside diameter	L. : Length
N.T. : Number of teeth	W. : Width
OPT. : Optional	d. : Diameter of material
AR. : As Requires	Ass'y : Assembly
B.No. : Body Number	Comp. : Complete

B.No.∿LJ10-12345 : Up to B.No. LJ10-12345

B.No. LJ10-12345∿ : From B.No. LJ10-12345

Figures in the remarks column show the dimensions of parts as follows;

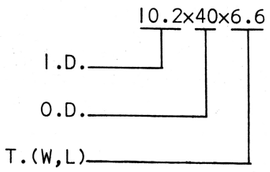

LHD : Shows the part used for the left handed drive vehicle

RHD : Shows the part used for the right handed drive vehicle

B. ON ISSUE TO NEW SPARE PARTS CATALOGUE

This parts catalogue was arranged to include modifications as of November 1970.
In case of modifications a new sheet will be issued.
Be sure to file with the related page.
Once each year new catalogues will be issued, containing, of course, all prior modifications.
Upon receipt of each new issue the old catalogue should be destroyed.

C. INSTRUSTION FOR ORDERING PARTS

1. The correct parts number and description of each part should be listed on the formal order sheet when ordering.
2. All paints are available at our parts department.
3. There may be a slight difference between the actual body color and the below printed color due to the printing ink,ect.

Colors used on SUZUKI LJ10R and LJ10L are as follows;

Color No.	Color Name	Mansel Color No.	Color
019	Black	N1	
072	Argil Gray	2.5PB 9/1	
144	Sunder Yellow		
191	Clarence Beige	4Y 6.7/2	
206	Albert Green	7.5Y 5.5/4	

Fabric No.	Fabric Name	Fabric No.	Fabric Name
357	Black	405	White
382	Black		

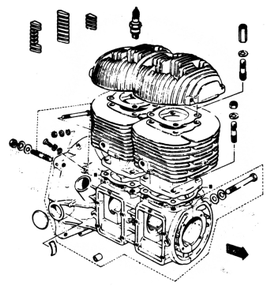

①

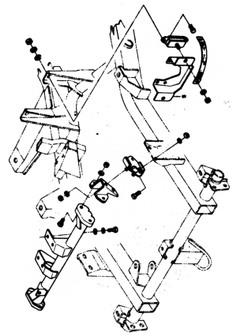

②

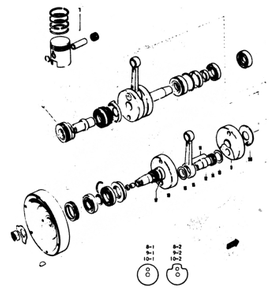

③

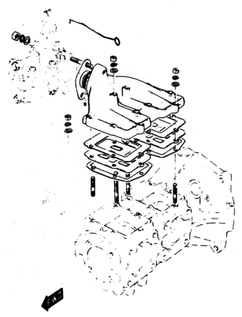

④

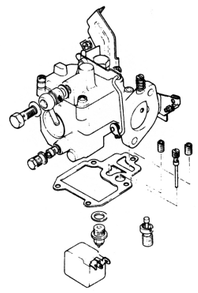

⑤

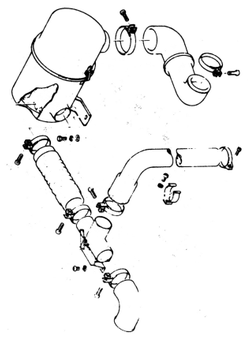

⑥

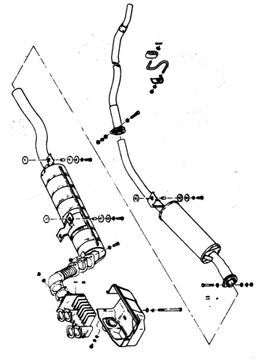

⑦

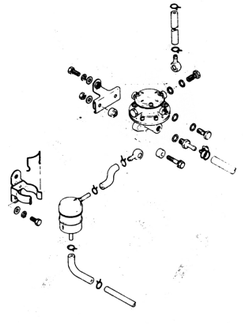

⑧

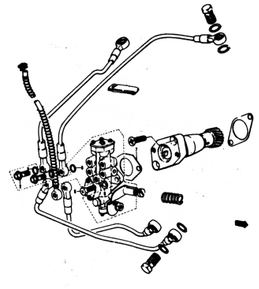

⑨

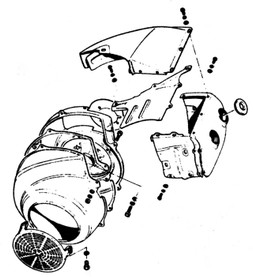

⑩

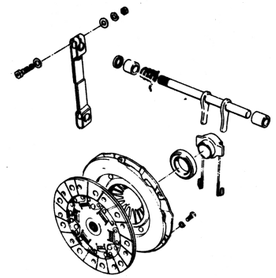

⑪

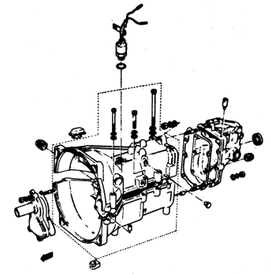

⑫

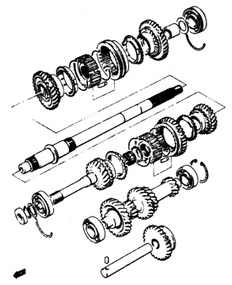

⑬

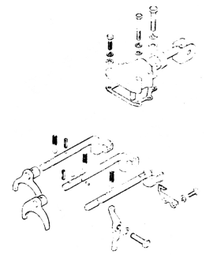

⑭

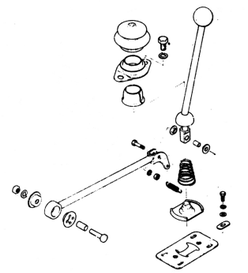

⑮

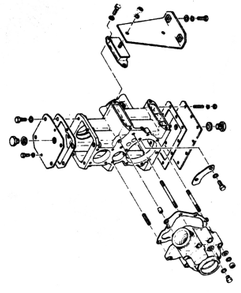

⑯

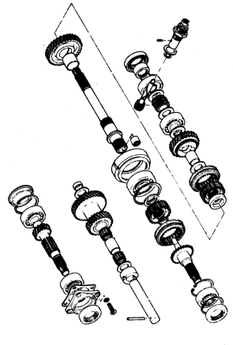

⑰

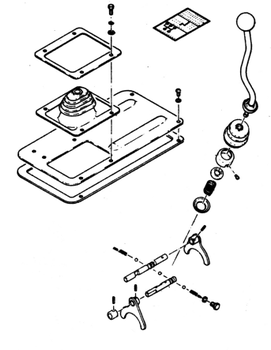

⑱

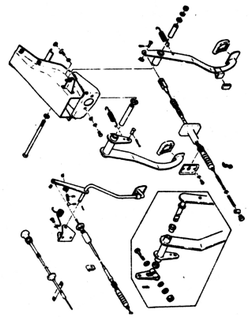

⑲

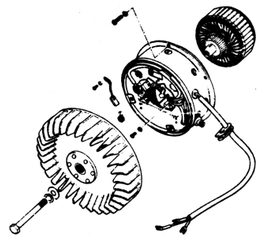

⑳

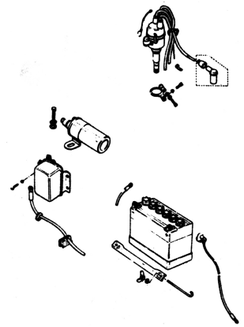

㉑

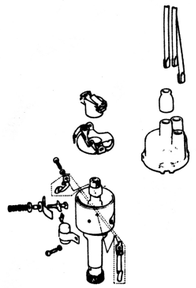

㉒

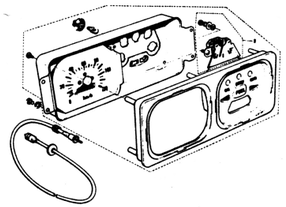

㉓

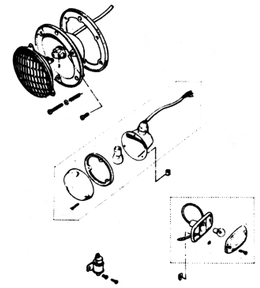

㉔

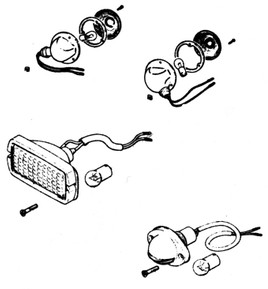

㉕

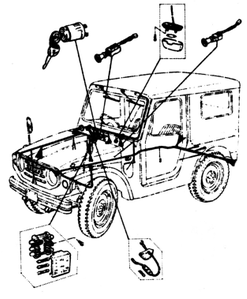

㉖

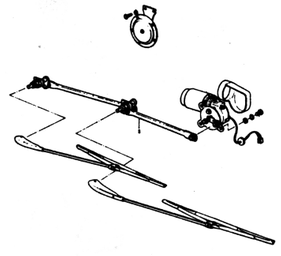

㉗

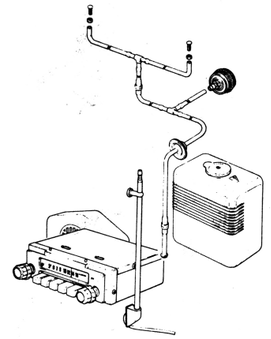

㉘

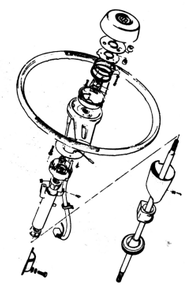

㉙

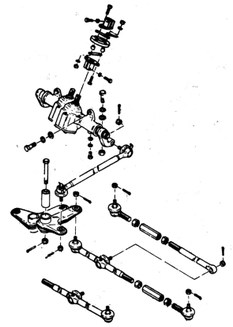

㉚

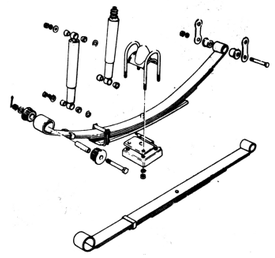

㉛

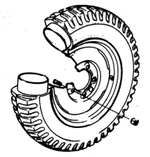

㉜

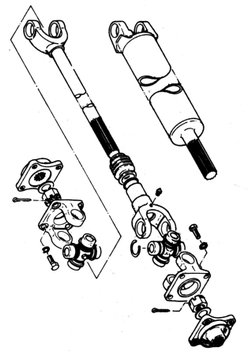

㉝

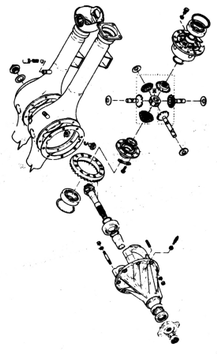

㉞

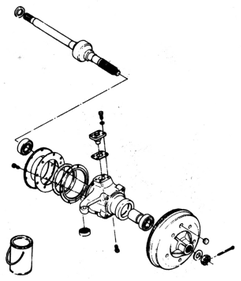

㉟

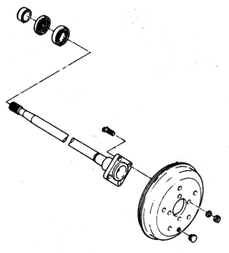

㊱

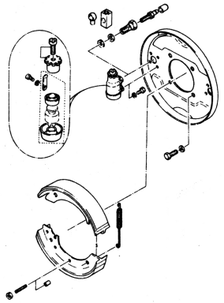

37

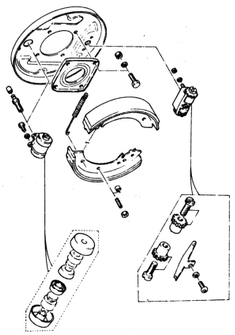

38

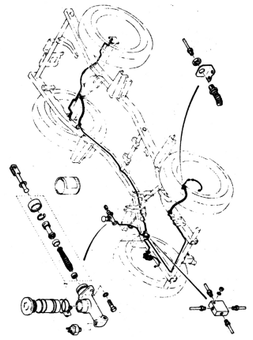

39

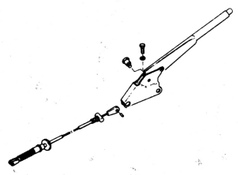

40

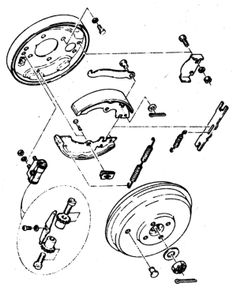

41

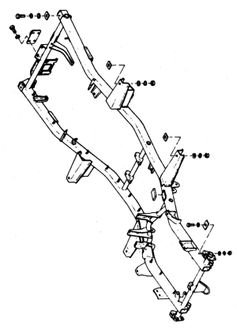

42

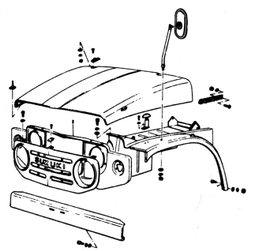

43

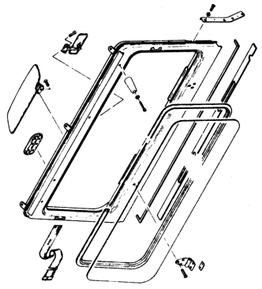

44

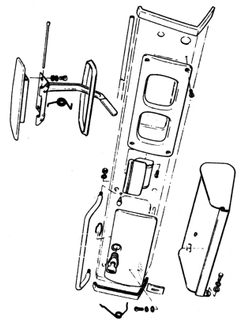

45

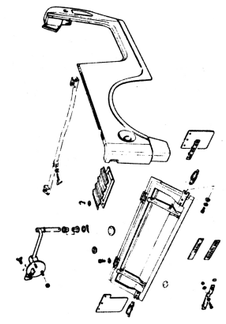

46

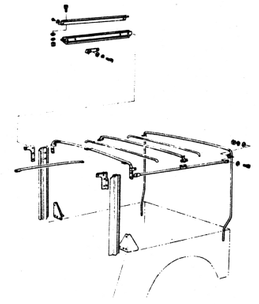

47

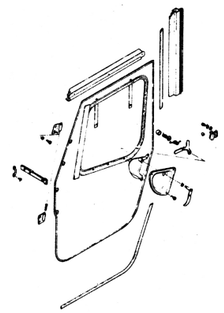

48

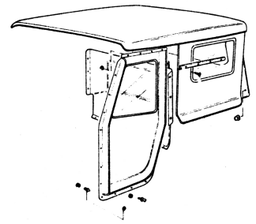

49

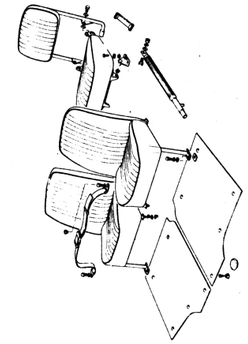

50

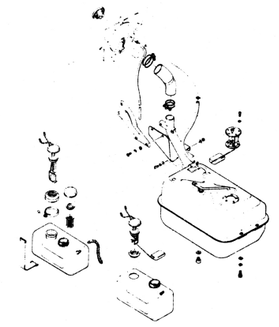

51

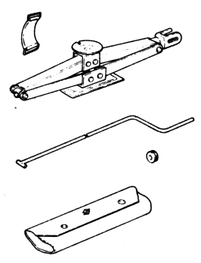

52

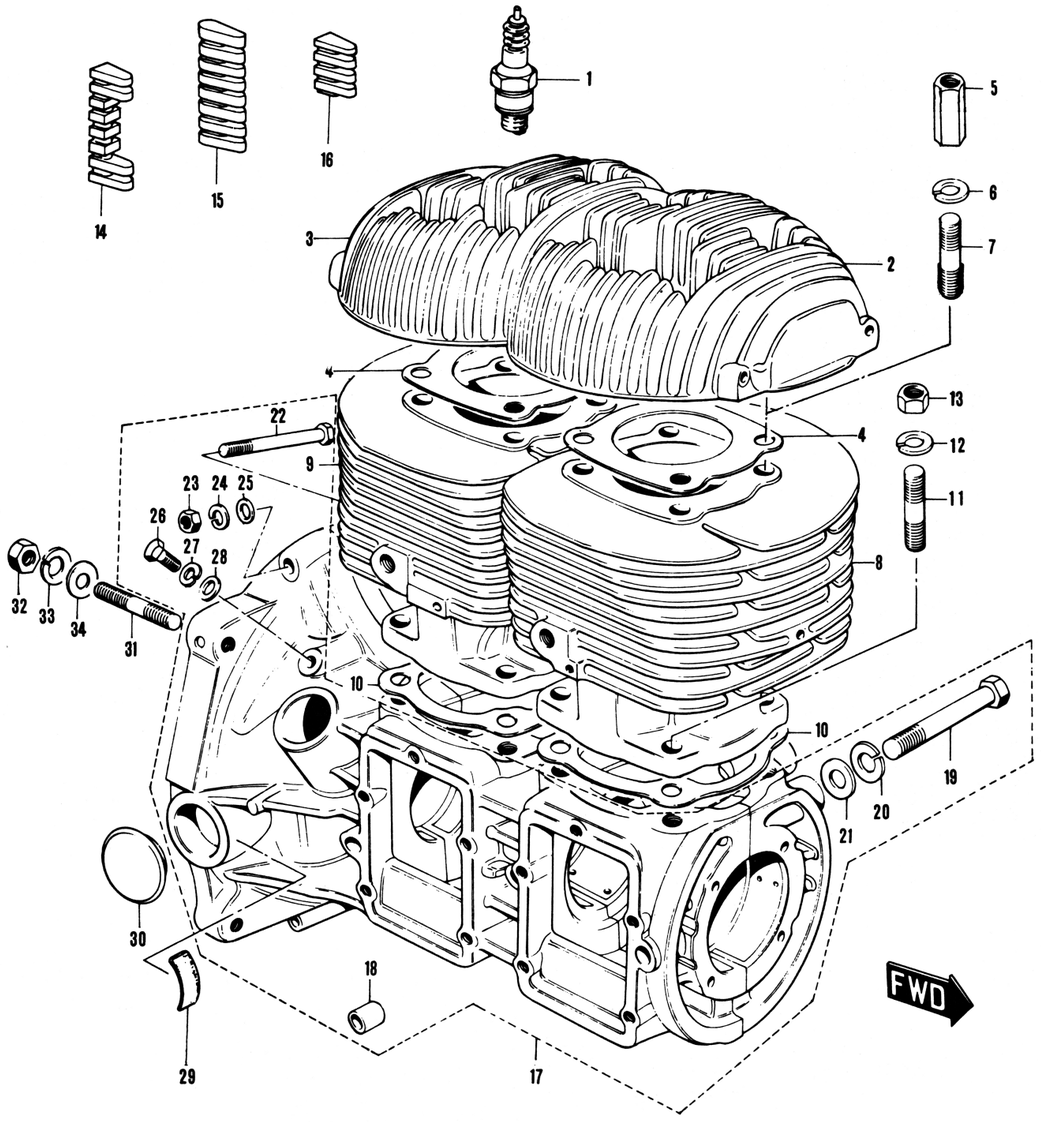

CYLINDER - CRANKCASE

Ref.No.	Part No.	Description	Q'ty	Remarks
1	09482-00050	SPARK PLUG ASSY	2	B7HS, NGK
2	11111-61401	CYLINDER HEAD (1)	1	
3	11121-61400	CYLINDER HEAD (2)	1	
4-1	11141-52540	GASKET, cylinder head	2	STD, ID:62
4-2	11141-52740	GASKET, cylinder head	2	OPT, ID:63
5	09159-10007	NUT	8	
6	08322-11108	WASHER	8	
7	09108-10002	STUD BOLT	8	
8	11210-61400	CYLINDER (1)	1	
9	11220-61400	CYLINDER (2)	1	
10	11241-52510	GASKET, cylinder	2	
11	01421-10308	STUD BOLT	8	
12	08321-31108	LOCK WASHER	8	
13	08312-11108	NUT	8	
14	11231-61030	PLATE, guide (1)	2	
15	11232-61030	PLATE, guide (2)	2	
16	11233-61030	PLATE, guide (3)	4	
17	11300-63809	CRANKCASE ASSY	1	
18	04211-09169	·DOWEL PIN	2	
19	01122-10808	·BOLT	6	
20	08321-21108	·LOCK WASHER	6	
21	08322-11108	·WASHER	6	
22	01112-06708	·BOLT	4	
23	08311-11068	·NUT	4	
24	08321-21068	·LOCK WASHER	4	
25	08322-21068	·WASHER	4	
26	01112-06108	·BOLT	1	
27	08321-21068	·LOCK WASHER	1	
28	08322-21068	·WASHER	1	
29	11951-52600	EMBLEM, ignition timing	1	
30	09250-26001	PLUG, timing inspection hole	1	
31	01421-10358	STUD BOLT	4	
32	08312-11108	NUT	4	
33	08321-21108	LOCK WASHER	4	
34	08322-11108	WASHER	4	

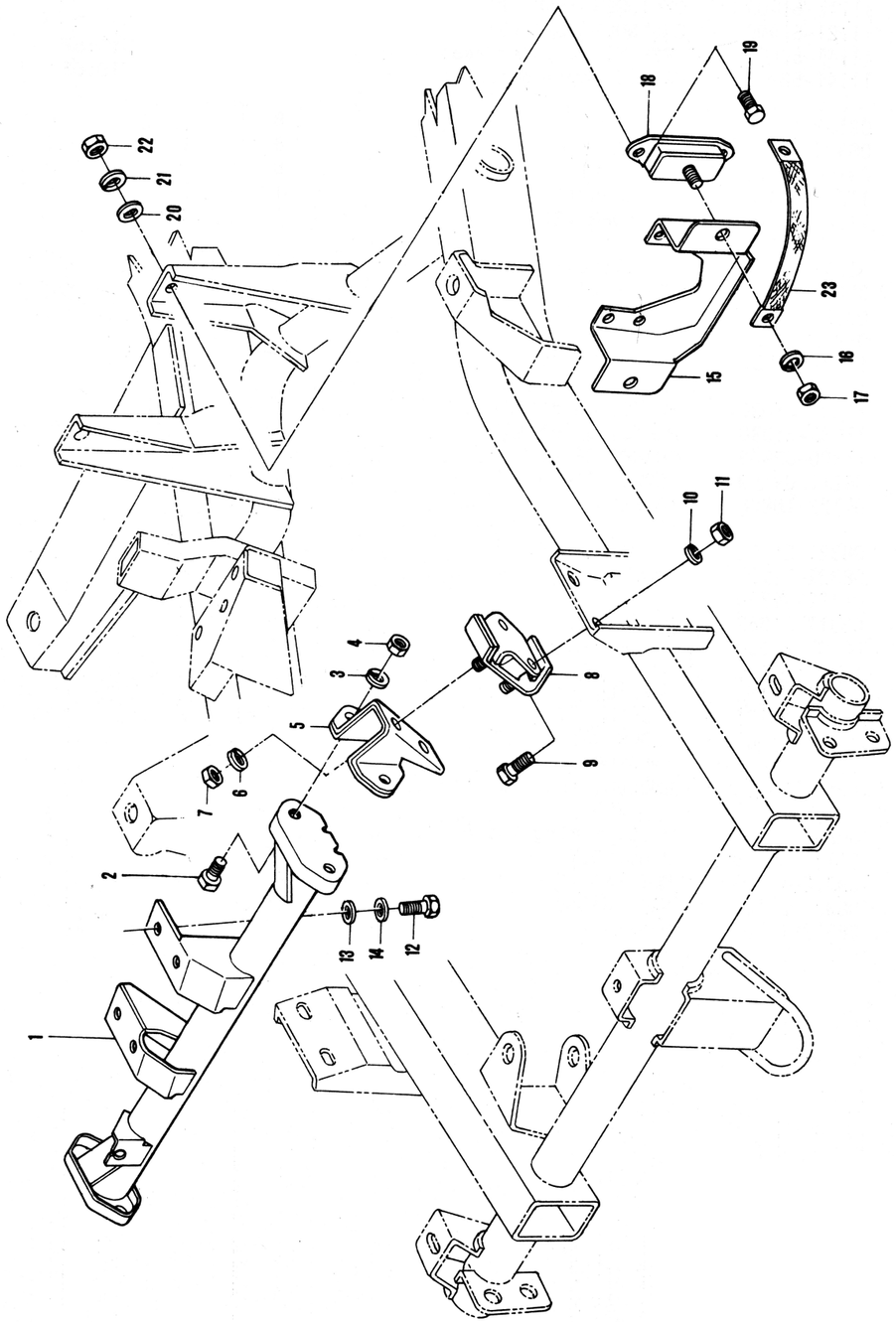

ENGINE MOUNTING

Ref.No.	Part No.	Description	Q'ty	Remarks
1	11630-59001	MEMBER COMP, front mounting	1	
2	01122-08258	BOLT	4	
3	08321-21088	LOCK WASHER	4	
4	08312-11088	NUT	4	
5	11640-63000	BRACKET COMP, mounting side	2	
6	08321-21088	LOCK WASHER	4	
7	08312-11088	NUT	4	
8	11610-59020	MOUNTING COMP, front	2	
9	01122-08208	BOLT	4	
10	08321-21088	LOCK WASHER	4	
11	08312-11088	NUT	4	
12	01122-08208	BOLT	4	
13	08322-11088	WASHER	4	
14	08321-21088	LOCK WASHER	4	
15	11741-63000	BRACKET, rear mounting	1	
16	08321-21088	LOCK WASHER	2	
17	08312-11088	NUT	2	
18	29610-63021	MOUNTING COMP, crankcase	2	
19	01122-08168	BOLT	4	
20	08322-11088	WASHER	4	
21	08321-21088	LOCK WASHER	4	
22	08312-11088	NUT	4	
23	33860-52051	CABLE COMP, engine ground	1	

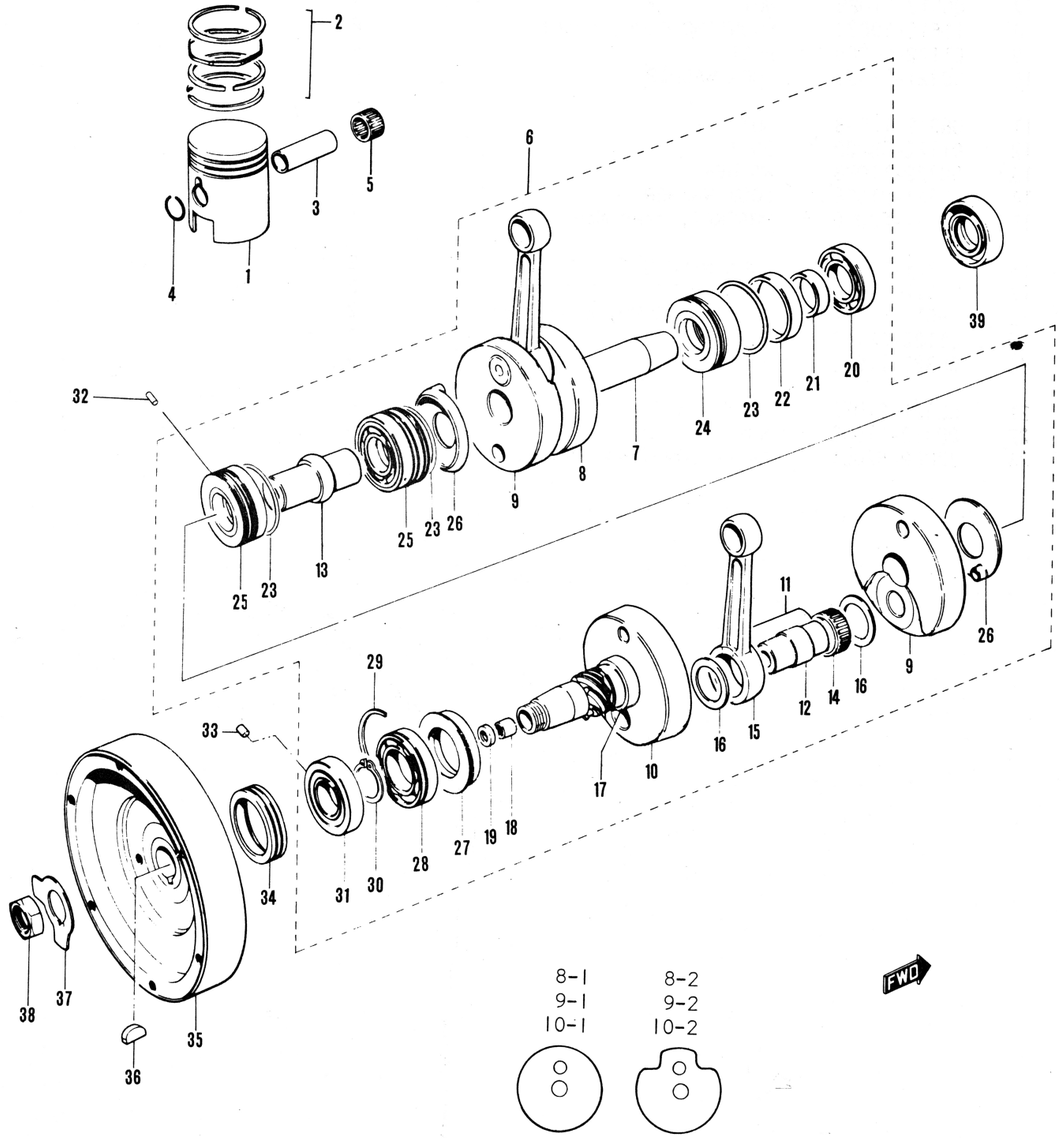

PISTON - CRANKSHAFT

Ref.No.	Part No.	Description	Q'ty	Remarks
1-1	12110-52301	PISTON COMP	2	STD
1-2	12110-52710	PISTON COMP	2	OPT, OS:0.5
1-3	12110-52720	PISTON COMP	2	OPT, OS:1.0
2-1	12140-61841	RING SET, piston	1	STD
2-2	12140-61842	RING SET, piston	1	OPT, OS:0.5
2-3	12140-61843	RING SET, piston	1	OPT, OS:1.0
3	12151-51030	PIN, piston	2	
4	09381-18002	CIRCLIP, piston pin	4	
5	09263-18002	BEARING, piston pin	2	
6	12002-61812	CRANKSHAFT ASSY	1	
7	12221-52002	·CRANKSHAFT, dynamo side	1	
8-1	12222-61001	·CRANK WHEEL, dynamo side	1	
8-2	12222-61000	·CRANK WHEEL, dynamo side	1	
9-1	12232-61001	·CRANK WHEEL, middle	2	
9-2	12232-61000	·CRANK WHEEL, middle	2	
10-1	12240-61002	·CRANKSHAFT, flywheel side	1	
10-2	12240-61001	·CRANKSHAFT, flywheel side	1	B.No.~21315
11	12211-61030	·PIN, crank	2	
12	12211-51030	·PIN, crank	2	
13	12231-51001	·CRANKSHAFT, middle	1	
14	09263-24009	·BEARING, crank pin	2	
15	12161-51000	·ROD, connecting	2	
16	09160-24009	·THRUST WASHER, connecting rod	4	24x41x1.0
17	12243-61000	·SPACER	1	35x41x12, B.No.-21316~
18	09263-10003	·BEARING, input shaft	1	ID:10, OD:15
19	09282-10001	·OIL SEAL, input shaft	1	9.4x17x5
20	08113-62050	·BEARING, dynamo side crank (1)	1	
21	09180-25007	·SPACER, dynamo side crank (1)	1	25x34x11
22	09180-45001	·SPACER, dynamo side crank (2)	1	36x52x11
23	09280-59002	·O RING	3	ID:52
24	12310-52541	·BEARING, dynamo side crank (1)	1	
25	12320-52541	·BEARING ASSY, middle crank	2	
26	12511-51000	·PLATE, oil guide	2	
27	09289-41001	·OIL SEAL	1	40x72x10
28	08164-62070	·BEARING	1	
29	09390-72001	·C RING	1	
30	08331-11395	·CIRCLIP	1	
31	09262-30010	·BEARING, crank (2)	1	30x72x16
32	09261-04006	DOWEL PIN, bearing	3	4x10
33	09261-05004	DOWEL PIN, bearing	1	5.5x10
34	09283-48002	OIL SEAL	1	47x72x12
35	12621-61000	FLYWHEEL	1	
36	08341-31059	KEY, woodruff	1	
37	09167-25005	WASHER	1	
38	09140-24003	NUT	1	
39	09283-25013	OIL SEAL	1	25x47x7

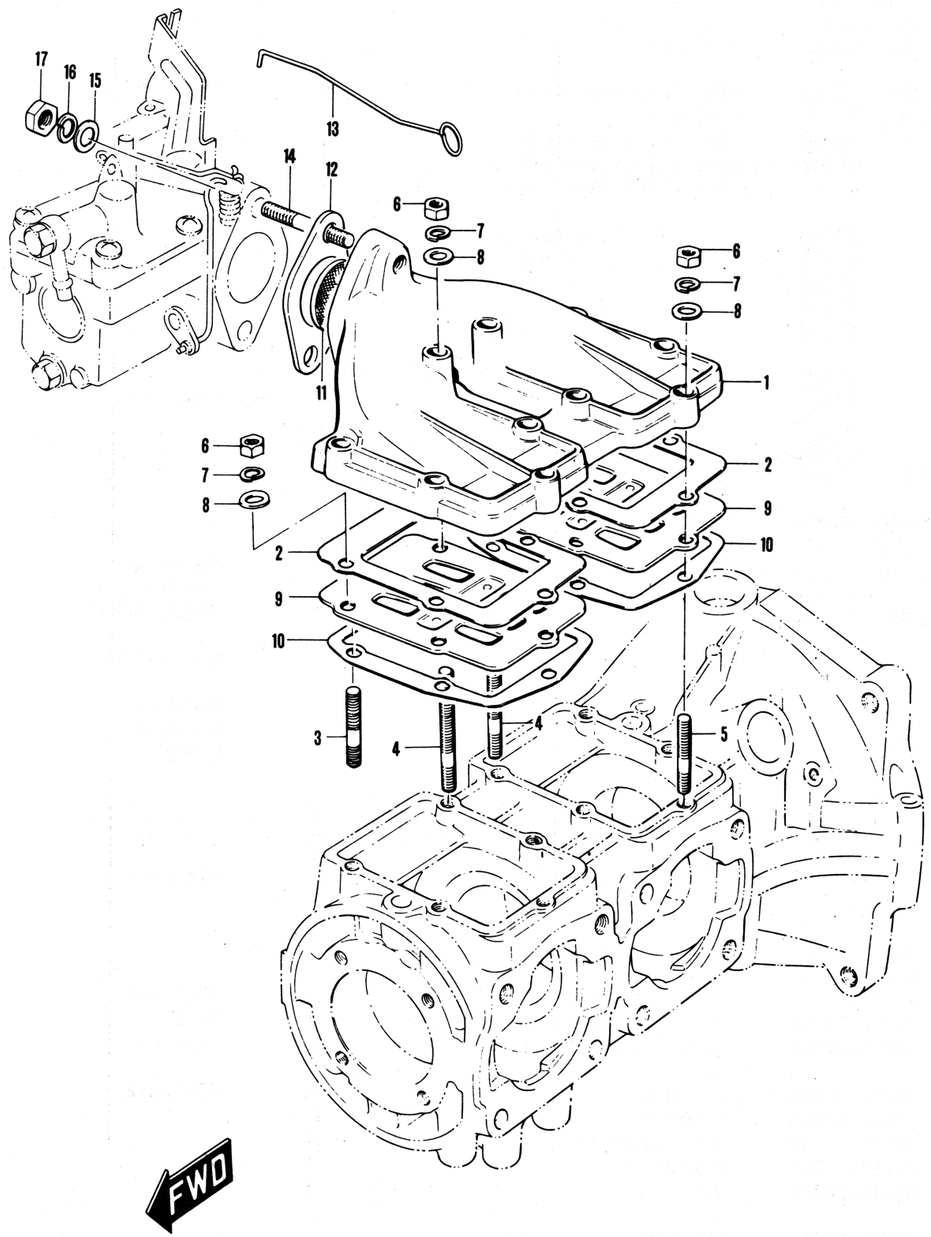

AIR INLET

Ref.No.	Part No.	Description	Q'ty	Remarks
1	13111-61004	MANIFOLD, inlet	1	
2	13121-51002	GASKET, inlet manifold	2	
3	01421-06308	STUD BOLT	6	
4	01421-06508	STUD BOLT	2	
5	01411-06308	STUD BOLT	2	
6	08311-11068	NUT	10	
7	08321-21068	LOCK WASHER	10	
8	08322-21068	WASHER	10	
9	13150-52510	VALVE ASSY, reed	2	
10	13156-51000	GASKET, reed valve	2	
11	13130-61000	INSULATOR, intake manifold	1	
12	13125-61000	GASKET, carburetor	1	
13	13192-61003	LINK, carburetor lever	1	
14	09108-08032	STUD BOLT	2	
15	08322-11088	WASHER	2	
16	08321-21088	LOCK WASHER	2	
17	08312-11088	NUT	2	

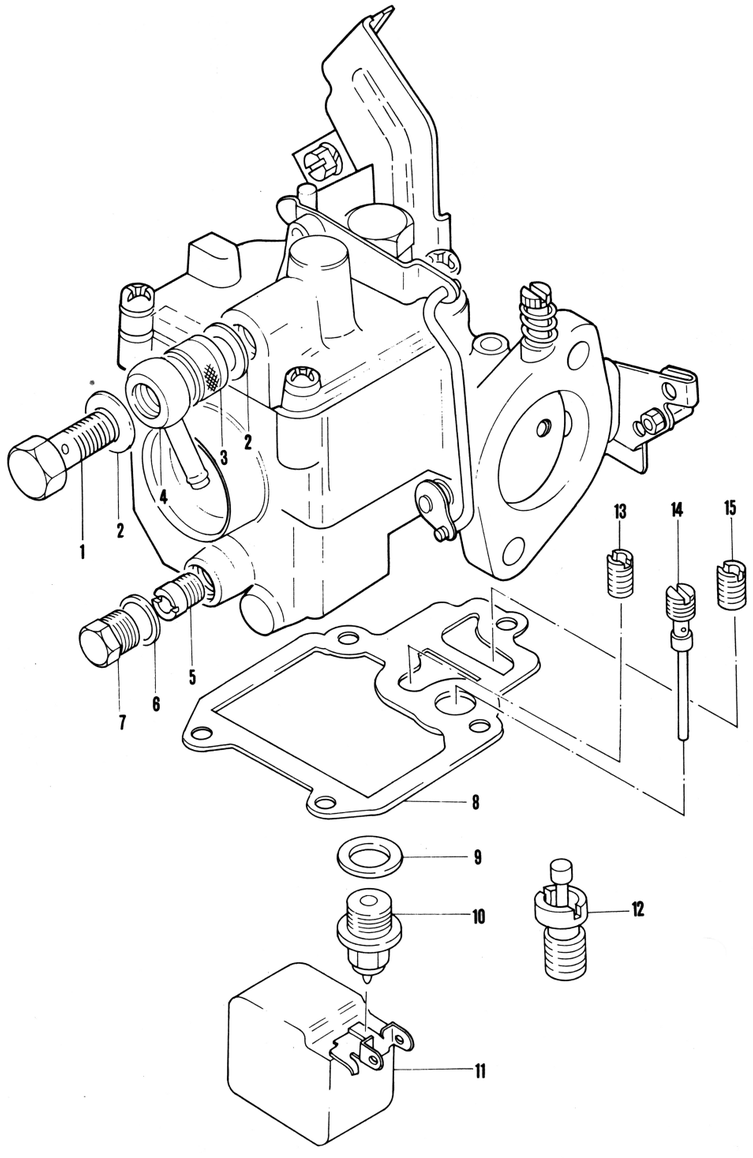

CARBURETOR

Ref.No.	Part No.	Description	Q'ty	Remarks
0-1	13200-63043	CARBURETOR ASSY	1	
1	13275-62040	·UNION BOLT	1	
2	13389-62040	·GASKET, union bolt	2	
3	13278-62040	·FILTER	1	
4	13274-62040	·NIPPLE, union	1	
5	09491-22009	·JET, main	1	#110
6	13229-60040	·GASKET, drain plug	1	
7	13228-60040	·PLUG, drain	1	
8	13251-62040	·GASKET, float chamber	1	
9	13391-62040	·GASKET, needle valve	1	
10	13370-62040	·VALVE ASSY, needle	1	
11	13252-62040	·FLOAT COMP	1	
12	13470-62040	·JET ASSY, power	1	#65
13	09492-38001	·JET, pilot	1	#50
14	09493-80002	·JET, main air	1	#80
15	09493-26002	·JET, pilot air	1	#130

LJ10 E1

-5-

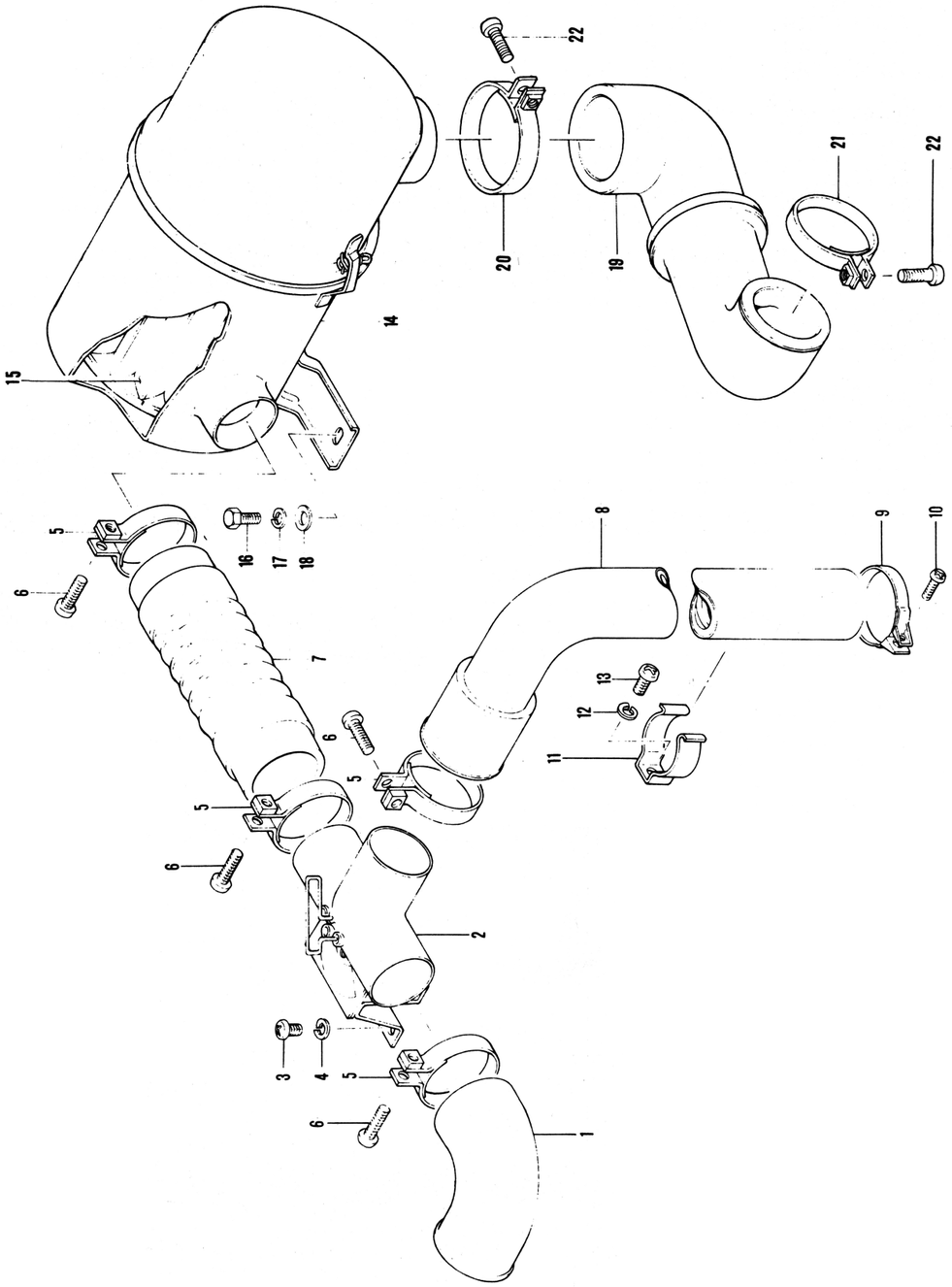

Ref.No.	Part No.	Description	Q'ty	Remarks
1	13878-63010	JOINT, air suction case	1	
2	13850-63661	CASE COMP, air suction	1	
3	02111-06087	SCREW	3	
4	08321-21068	LOCK WASHER	3	
5	09402-00139	CLAMP	4	
6	02111-05257	SCREW	4	
7	13870-63051	HOSE, air suction	1	
8	13840-63051	HOSE, warm air	1	
9	09402-00210	CLAMP	1	
10	02111-04168	SCREW	1	
11	09410-00027	CLAMP	1	
12	08321-21068	LOCK WASHER	1	
13	02112-06108	SCREW	1	
14	13700-63601	CLEANER ASSY, air	1	
15	13780-60011	FILTER COMP, air	1	
16	01122-08128	BOLT	2	
17	08321-21088	LOCK WASHER	2	
18	08322-11088	WASHER	2	
19	13881-63001	HOSE, carburetor	1	
20	09402-00119	CLAMP	1	
21	09402-00164	CLAMP	1	
22	02111-05257	SCREW	2	

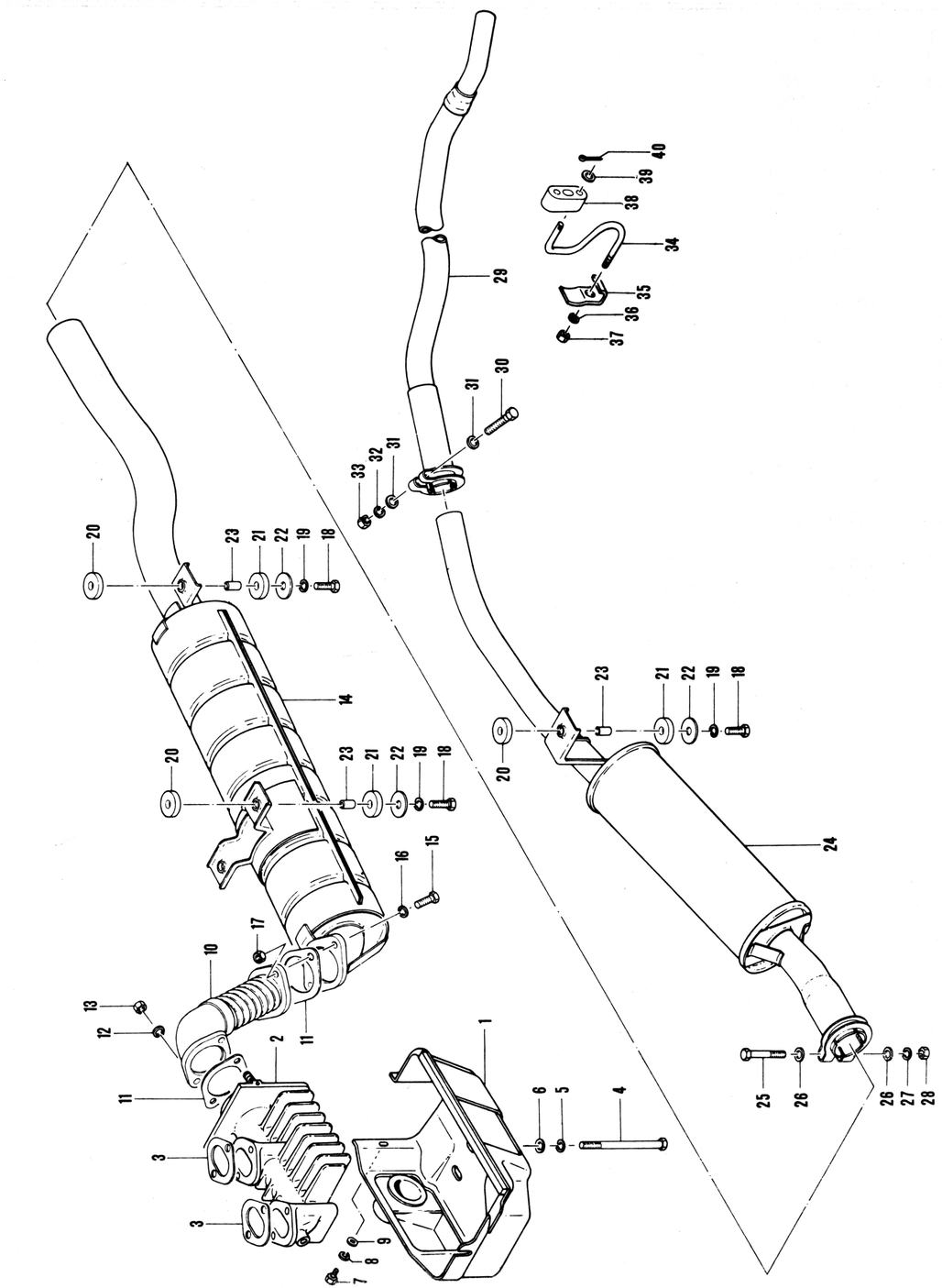

Ref.No.	Part No.	Description	Q'ty	Remarks
1	17340-63600	COVER COMP, exhaust	1	
2	14110-61000	MANIFOLD ASSY, exhaust	1	
3	14141-61410	GASKET, exhaust manifold	2	
4	09100-08065	BOLT, exhaust manifold (1)	4	8x123
5	08321-21088	LOCK WASHER	4	
6	08322-21088	WASHER	4	
7	09100-04101	BOLT	2	4x8
8	08321-21048	LOCK WASHER	2	
9	08322-21048	WASHER	2	
10	14150-63001	PIPE COMP, exhaust	1	
11	14181-52000	GASKET, exhaust pipe	2	
12	08321-21088	LOCK WASHER	2	
13	08312-11088	NUT	2	
14	14301-63042	MUFFLER COMP, first	1	
15	01122-08308	BOLT	2	
16	08321-21088	LOCK WASHER	2	
17	08312-11088	NUT	2	
18	01122-08308	BOLT	4	
19	08321-21088	LOCK WASHER	4	
20	09320-10006	CUSHION, muffler mounting (1)	4	
21	09320-10007	CUSHION, muffler mounting (2)	4	
22	09160-08028	WASHER, muffler mounting	4	
23	09180-08038	SPACER, muffler mounting	4	
24	14302-63041	MUFFLER COMP, second	1	
25	01122-08558	BOLT	1	
26	08322-11088	WASHER	2	
27	08321-21088	LOCK WASHER	1	
28	08312-11088	NUT	1	
29	14170-63001	PIPE COMP, tail	1	
30	01122-08558	BOLT	1	
31	08322-11088	WASHER	2	
32	08321-21088	LOCK WASHER	1	
33	08312-11088	NUT	1	
34	14721-63002	HOOK, tail pipe hanger	1	
35	14731-63003	PLATE, tail pipe hanger	1	
36	08321-21088	LOCK WASHER	1	
37	08312-11088	NUT	1	
38	14741-59030	STRAP, hanger	1	
39	08322-21088	WASHER	1	
40	04111-20158	COTTER PIN	1	

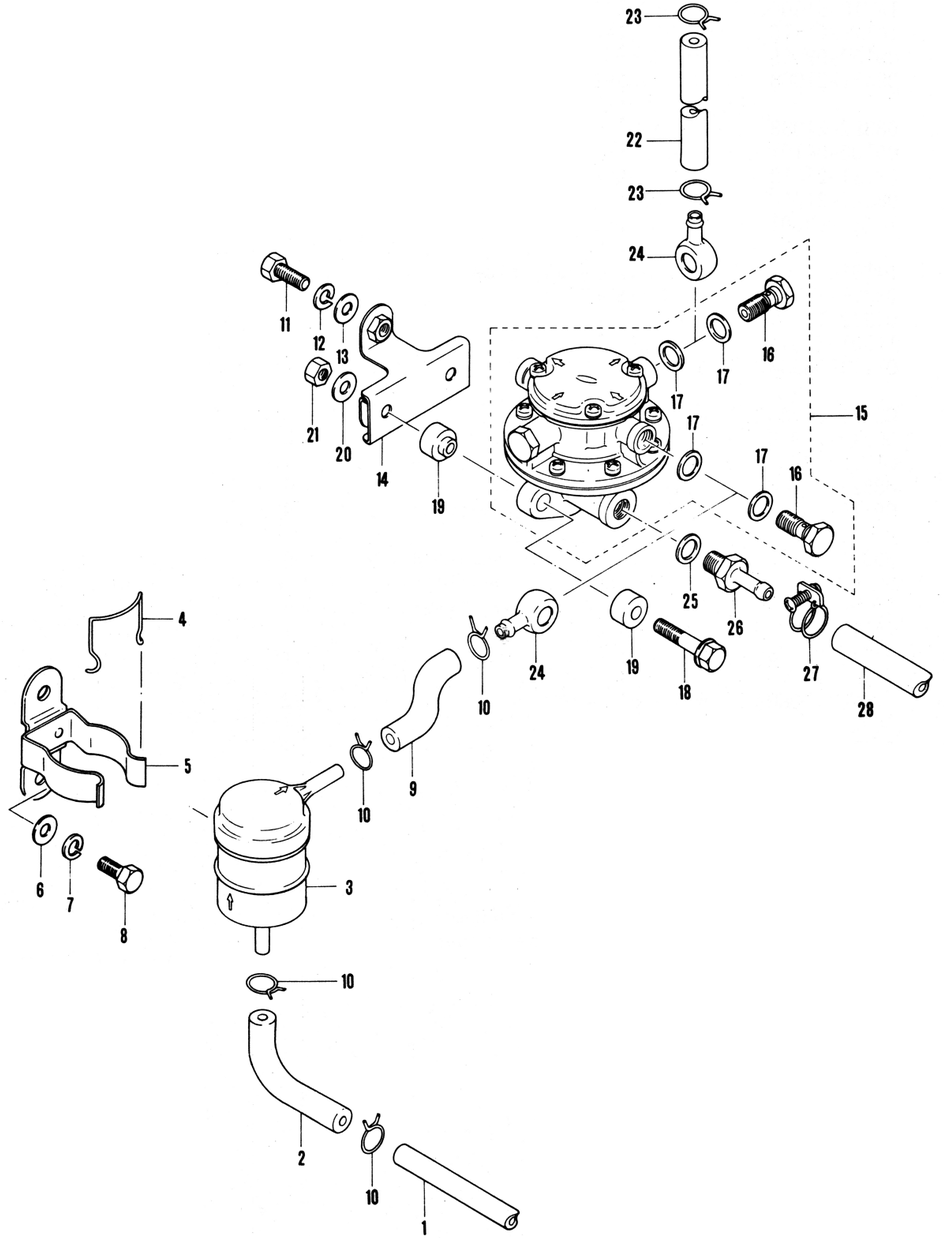

Ref.No.	Part No.	Description	Q'ty	Remarks
1	15810-63013	PIPE, fuel (1)	1	
2	09343-05084	HOSE, fuel (2)	1	L:80
3	15410-58030	FILTER COMP, fuel	1	
4	15429-65000	CLIP	1	
5	15420-63000	BRACKET, fuel filter	1	
6	08322-21068	WASHER	2	
7	08321-21068	LOCK WASHER	2	
8	01111-06167	BOLT	2	
9	09343-05070	HOSE, fuel	1	L:60
10	09401-11402	CLIP	4	
11	01112-06168	BOLT	2	
12	08321-21068	LOCK WASHER	2	
13	08322-21068	WASHER	2	
14	15310-63000	BRACKET, fuel pump	1	
15	15100-63010	PUMP ASSY, fuel	1	
16	15197-51010	•BOLT, banjo	2	
17	15198-51010	•GASKET, banjo bolt	4	
18	01511-06308	BOLT	2	
19	09320-05004	CUSHION	4	
20	08322-21068	WASHER	2	
21	08312-11068	NUT	2	
22	09343-05044	HOSE, fuel	1	L:180
23	15814-61000	UNION, fuel hose	2	
24	09401-11402	CLIP	2	
25	09168-10012	GASKET	2	
26	09362-09003	UNION, vacuum hose	2	
27	09400-14301	CLAMP	2	
28	09343-06006	HOSE, vacuum	2	

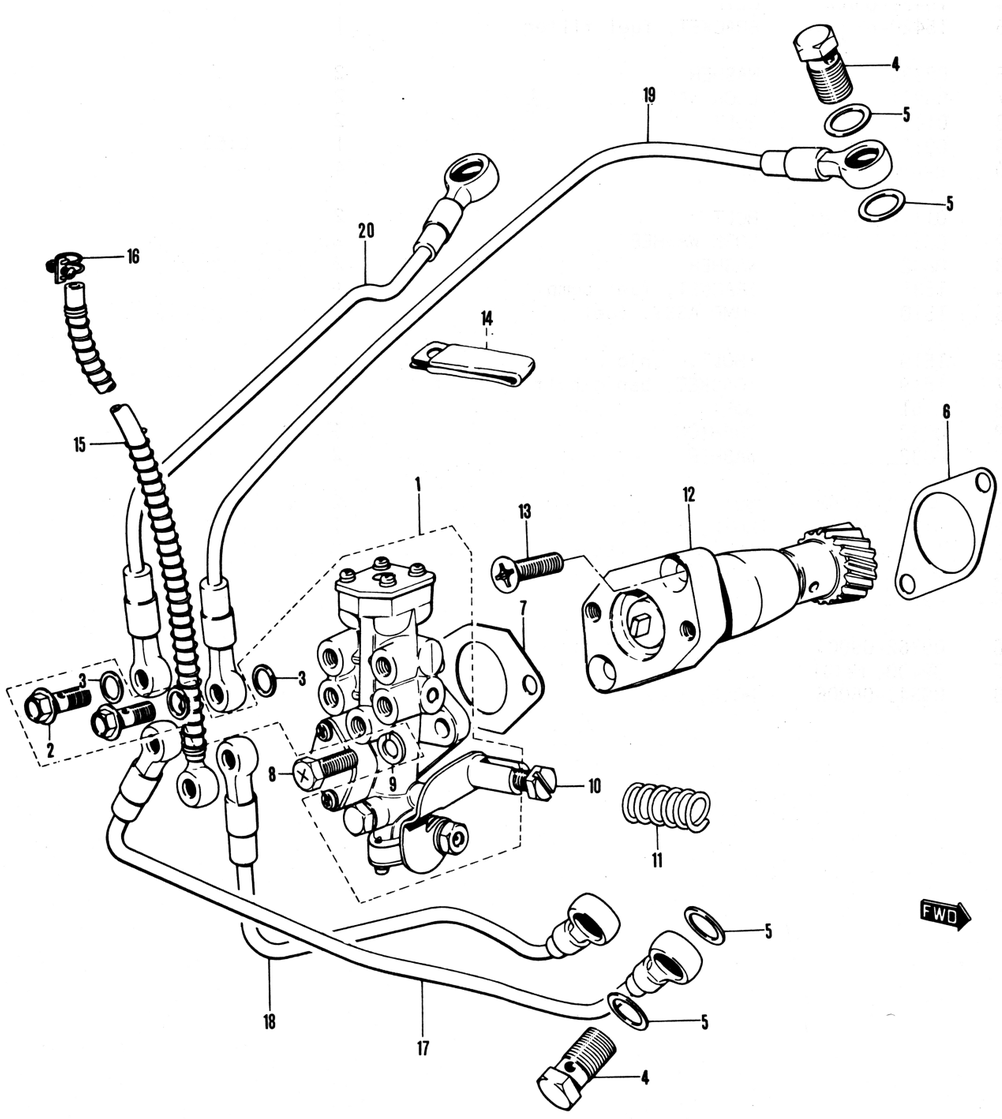

OIL PUMP - OIL HOSE

Ref.No.	Part No.	Description	Q'ty	Remarks
1	16101-61818	PUMP ASSY, oil	1	
2	09360-06010	•BOLT, union	5	
3	09168-06007	•GASKET, union bolt	10	6.2x10x1.0
4	16721-58000	NOZZLE, cylinder	4	
5	09168-10009	GASKET, cylinder nozzle	8	10x14x0.5
6	16385-55000	GASKET, oil pump (1)	1	
7	16732-52001	GASKET, oil pump (2)	1	
8	09128-06006	SCREW	2	
9	08321-21068	LOCK WASHER	2	
10	01112-06128	BOLT	1	
11	09440-14008	SPRING	1	
12	16770-61000	RETAINER SET, oil pump	1	
13	02121-16258	SCREW	2	
14	09403-00026	CLAMP, oil pump tube	2	
15	16810-61030	HOSE ASSY, oil tank	1	
16	09400-10301	CLAMP, oil tank hose	1	
17	16901-61030	HOSE, first crank oil	1	
18	16903-61030	HOSE, second crank oil	1	
19	16905-61030	HOSE, first cylinder oil	1	
20	16907-61030	HOSE, second cylinder oil	1	

LJ10 EI -9-

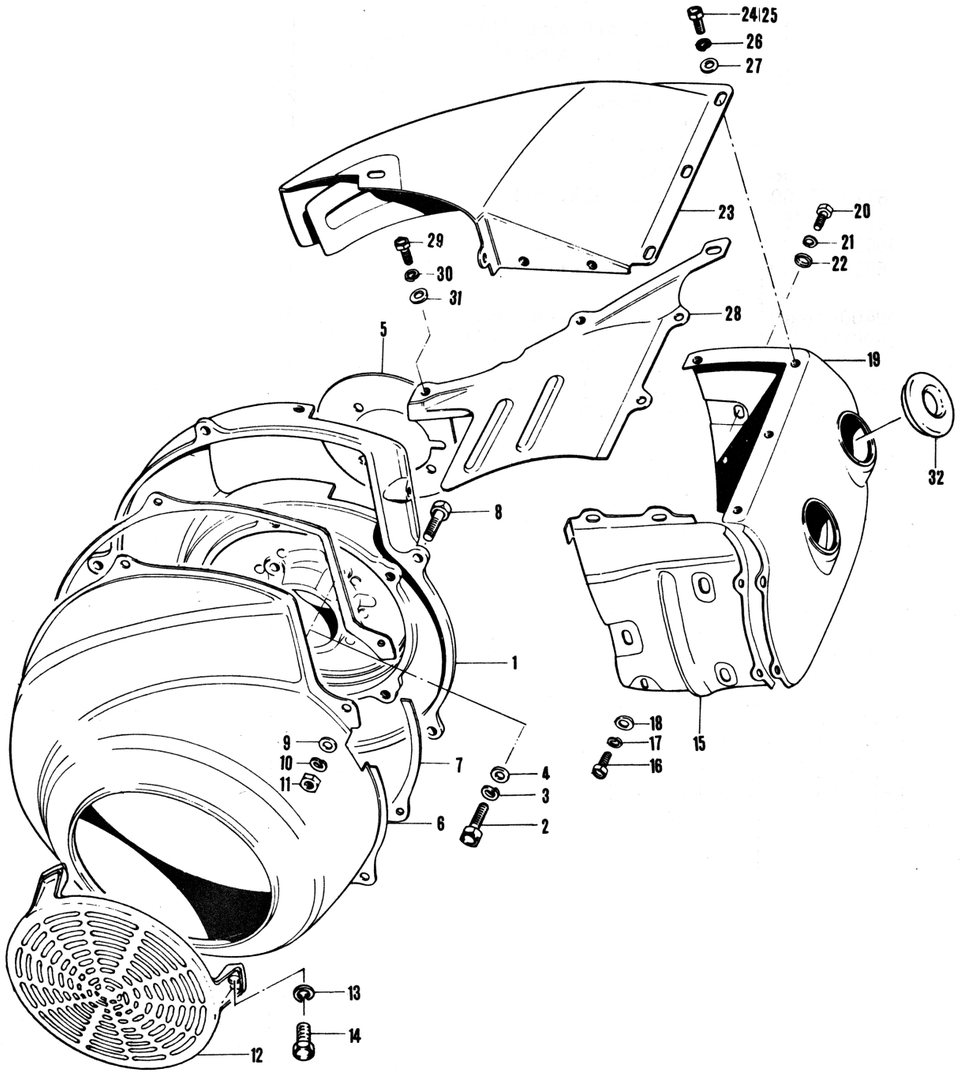

FAN COVER

Ref.No.	Part No.	Description	Q'ty	Remarks
1	11351-52502	HOUSING, dynamo	1	
2	01112-06257	BOLT, dynamo housing	4	
3	08321-21068	LOCK WASHER	4	
4	09160-05008	WASHER	3	5.5x10x0.8
5	11359-52001	GASKET, dynamo housing	1	
6	17210-53000	CASE, engine cooling fan	1	
7	17215-61000	PAD, engine cooling fan case	1	
8	01112-06167	BOLT	5	
9	08322-21068	WASHER	5	
10	08321-21068	LOCK WASHER	5	
11	08311-11068	NUT	5	
12	17221-61000	COVER, cooling fan case	1	
13	08321-21058	LOCK WASHER	3	
14	01111-05088	BOLT	3	
15	17230-61000	COWLING, ventilation front	1	
16	01112-06127	BOLT	3	
17	08321-21068	LOCK WASHER	6	
18	08322-21068	WASHER	6	
19	17240-61000	COWLING COMP, ventilation side	1	
20	01112-06128	BOLT	5	
21	08321-21068	LOCK WASHER	5	
22	08322-21068	WASHER	5	
23	17260-61000	COWLING, ventilation upper	1	
24	09100-06026	BOLT	2	L:14
25	01112-06127	BOLT	6	
26	08321-21068	LOCK WASHER	8	
27	08322-21068	WASHER	8	
28	17280-52500	COWLING, ventilation lower	1	
29	01112-06127	BOLT	2	
30	08321-21068	LOCK WASHER	2	
31	08322-21068	WASHER	2	
32	17299-58001	BOOT, spark plug cap	2	

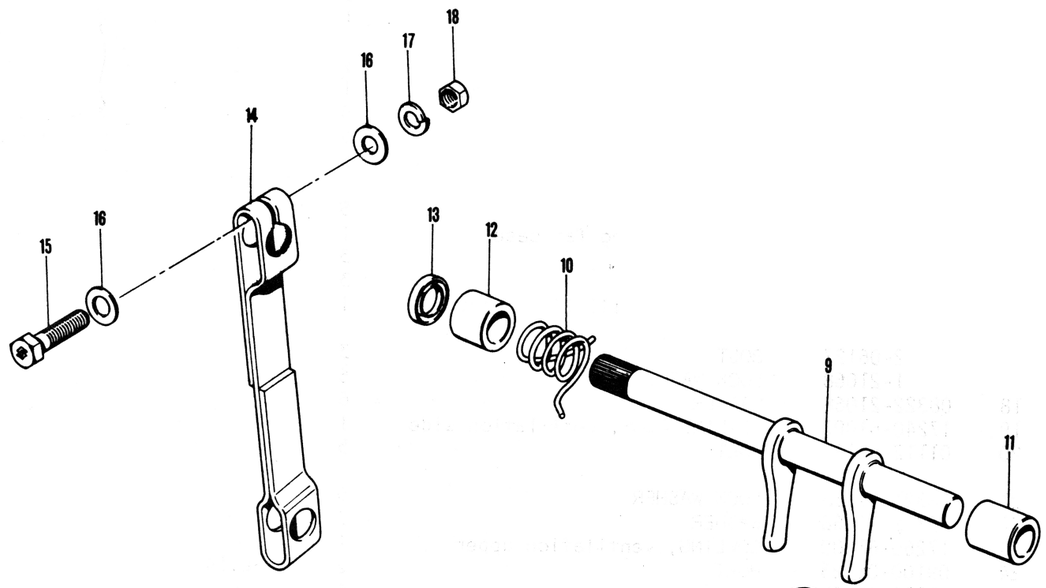

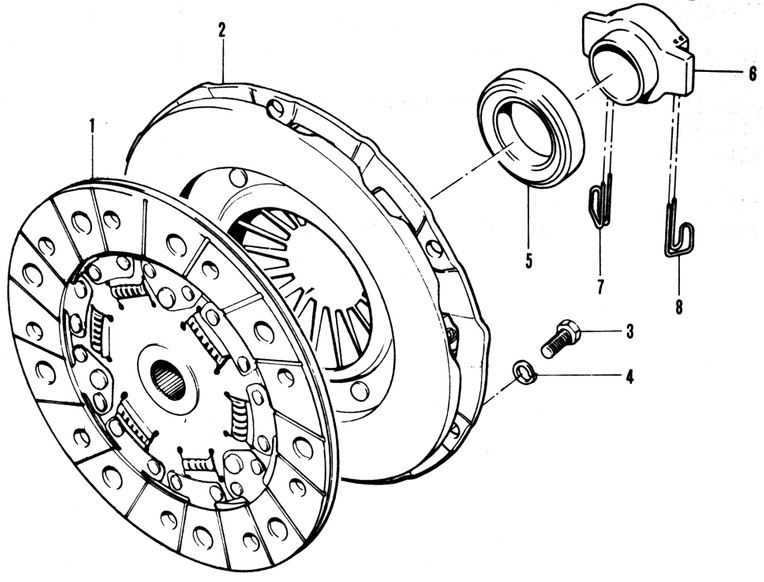

Ref.No.	Part No.	Description	Q'ty	Remarks
1	22400-63010	DISK COMP, clutch	1	
2	22100-52011	COVER ASSY, clutch	1	
3	01112-06167	BOLT	6	
4	08321-21068	LOCK WASHER	6	
5	09269-28001	BEARING, clutch release	1	28x49.6x14.5
6	09448-12002	RETAINER, bearing	1	
7	23181-59000	SPRING, bearing RH	1	
8	23180-59811	SPRING, bearing LH	1	
9	23260-60001	SHAFT COMP, clutch release	1	
10	09448-18008	SPRING	1	
11	09319-12008	BUSH, shaft (1)	1	12x20x22
12	09300-12004	BUSH, shaft (2)	1	12x20x20
13	09284-12005	OIL SEAL	1	12x20x4
14	23266-52000	ARM, clutch release	1	
15	01122-08358	BOLT	1	
16	08322-11088	WASHER	1	
17	08321-21088	LOCK WASHER	1	
18	08312-11088	NUT	1	

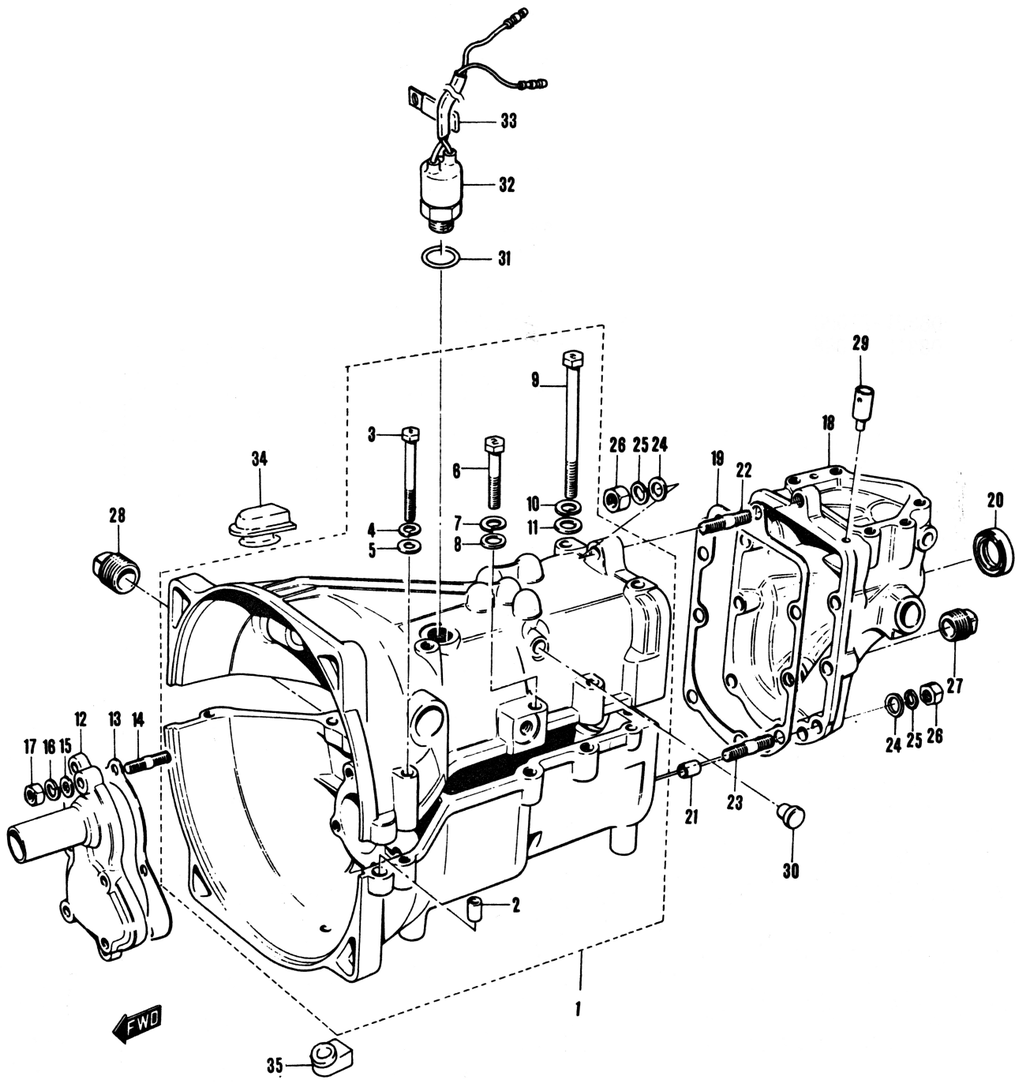

Ref.No.	Part No.	Description	Q'ty	Remarks
1	25715-60001	CASE ASSY, transmission	1	
2	04211-09149	•DOWEL PIN	2	
3	01112-06508	•BOLT	2	
4	08321-21068	•LOCK WASHER	2	
5	08322-21068	•WASHER	2	
6	01122-08458	•BOLT	4	
7	08321-21088	•LOCK WASHER	4	
8	08322-11088	•WASHER	4	
9	01122-08908	•BOLT	4	
10	08321-21088	•LOCK WASHER	4	
11	08322-11088	•WASHER	3	
12	24741-60000	RETAINER, input shaft bearing	1	
13	24781-60000	GASKET, input shaft bearing	1	
14	01421-06258	STUD BOLT	5	
15	08322-11068	WASHER	5	
16	08321-21068	LOCK WASHER	5	
17	08311-11068	NUT	5	
18	24770-61000	CASE COMP, extension	1	
19	24784-60000	GASKET, extension case	1	
20	09283-28005	OIL SEAL, extension case	1	
21	04211-09149	DOWEL PIN	2	
22	01411-08308	STUD BOLT	1	
23	01411-08358	STUD BOLT	7	
24	08322-11088	WASHER	8	
25	08321-31088	LOCK WASHER	8	
26	08312-11088	NUT	8	
27	09246-16002	PLUG, drain	1	
28	09246-16002	PLUG, oil level	1	
29	24821-09000	PLUG COMP, breather	1	
30	09250-08001	BLIND PLUG	2	
31	09280-11002	O RING	1	ID:11.4, D:1.9
32	37610-58021	SWITCH ASSY, back up lamp	1	
33	09403-00045	CLAMP	1	
34	24715-60571	VENTILATOR, upper	1	
35	24725-60020	VENTILATOR, lower	1	

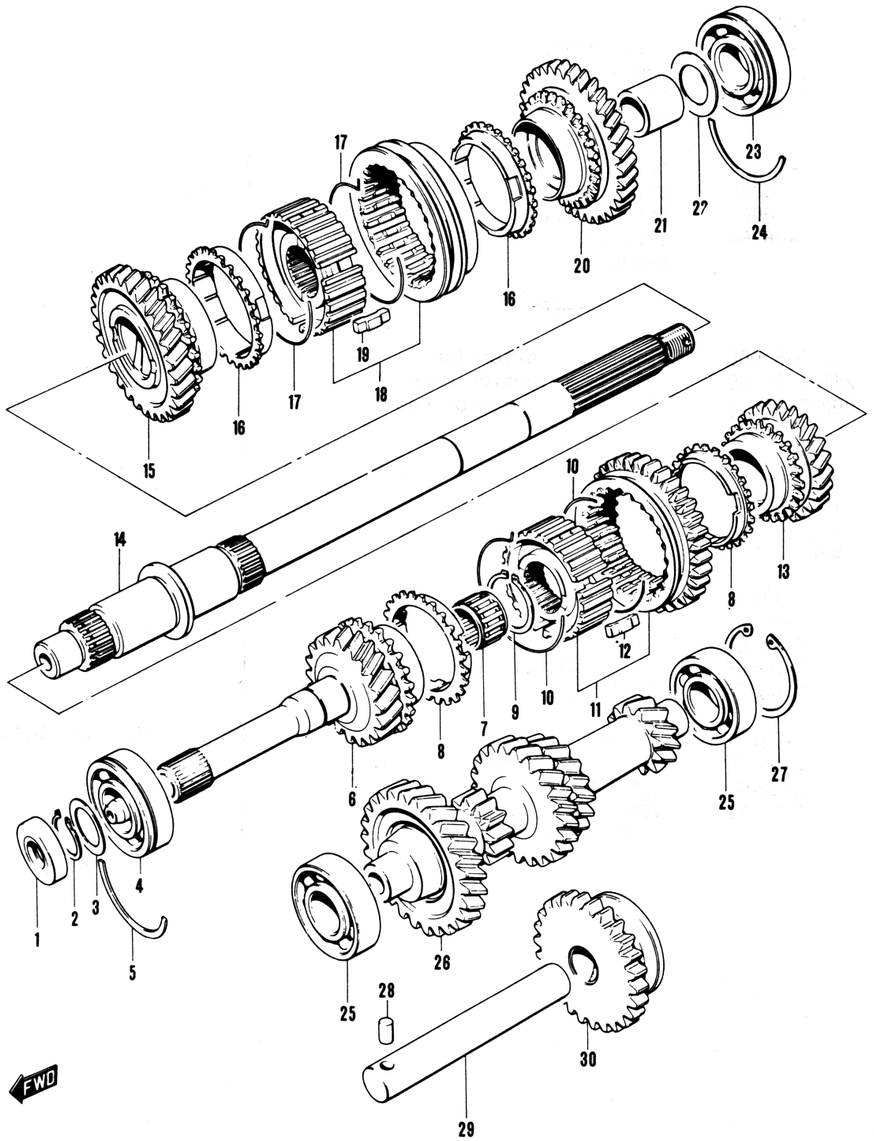

TRANSMISSION

Ref.No.	Part No.	Description	Q'ty	Remarks
1	09282-17002	OIL SEAL, input shaft	1	17x30x6
2	09380-17004	CIRCLIP, input shaft	1	
3	08312-17251	THRUST WASHER	1	
4	08163-62030	BEARING	1	
5	09390-40002	C RING, bearing	1	
6	24110-61001	SHAFT COMP, input	1	
7	09263-17002	BEARING, needle	1	
8	24431-59040	RING, high speed synchronizer	2	
9-1	08331-31219	CIRCLIP	1	
9-2	09380-22001	CIRCLIP	1	B.No.~20591
10	09388-00004	SPRING, synchronizer	2	
11	24400-63805	HUB SET, high speed synchronizer	1	
12	09422-05006	KEY, synchronizer	3	
13	24230-60000	GEAR COMP, main shaft third	1	
14	24121-61002	SHAFT, transmission main	1	B.No.~20591···both used Ref.No.9-2
15	24220-60001	GEAR COMP, main shaft second	1	
16	24432-58042	RING, low speed synchronizer	2	
17	09388-00007	SPRING, low speed synchronizer	2	
18	24402-58877	HUB SET, low speed synchronizer	1	
19	09422-05009	KEY, synchronizer	3	
20	24211-60003	GEAR, main shaft low	1	
21	09300-20004	BUSH, main shaft low gear	1	20x25x23
22	09160-20011	WASHER, main shaft low gear	1	
23	08163-63040	BEARING, main shaft	1	
24	09390-52003	C RING	1	
25	08113-62030	BEARING	2	
26	24130-61000	SHAFT COMP, counter	1	
27	09381-40001	CIRCLIP	1	
28	04221-05109	DOWEL PIN	1	
29	24551-60000	SHAFT, reverse gear	1	
30	24560-60000	GEAR COMP, reverse idler	1	

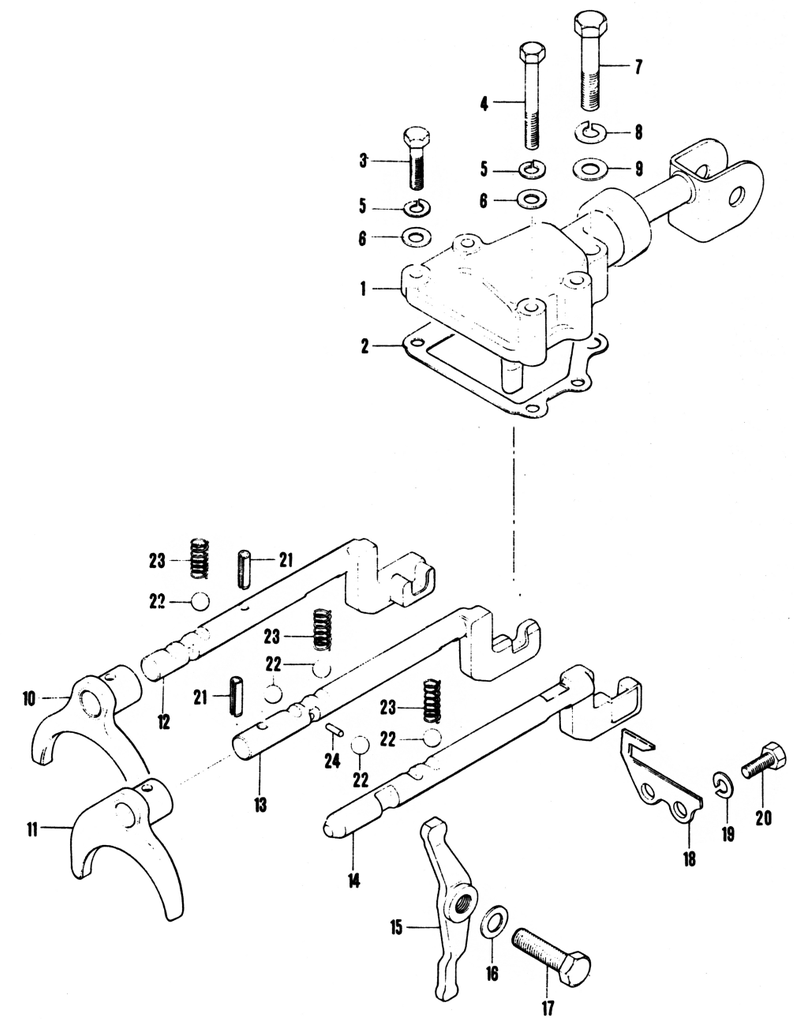

GEAR SHIFTING FORK

Ref.No.	Part No.	Description	Q'ty	Remarks
1	25100-63001	LEVER ASSY, gear shift	1	
2	25185-60000	GASKET, gear shift lever case	1	
3	01112-06257	BOLT	2	
4	01112-06508	BOLT	2	
5	08321-21068	LOCK WASHER	4	
6	08322-21068	WASHER	4	
7	01122-08458	BOLT	1	
8	08321-21088	LOCK WASHER	1	
9	08322-11088	WASHER	1	
10	25210-69000	FORK, low speed shift	1	
11	25220-69000	FORK, high speed shift	1	
12	25410-63000	SHAFT, low speed shift fork	1	
13	25420-63000	SHAFT, high speed shift fork	1	
14	09404-06702	SHAFT, reverse gear shift fork	1	
15	25460-60003	LEVER, reverse gear shift	1	
16	09168-10007	GASKET	1	
17	25711-60000	BOLT, reverse gear shift lever	1	
18	25481-63000	PLATE, shift fork shaft stop	1	B.No.~16911···both used
19	08321-21068	LOCK WASHER	2	
20	09100-06067	BOLT	2	
21	09205-04003	SPRING PIN	2	
22	09260-10001	BALL, gear shift locating	5	
23	09440-07005	SPRING, gear shift locating	3	
24	09261-03002	PIN,shifter shaft locating	1	

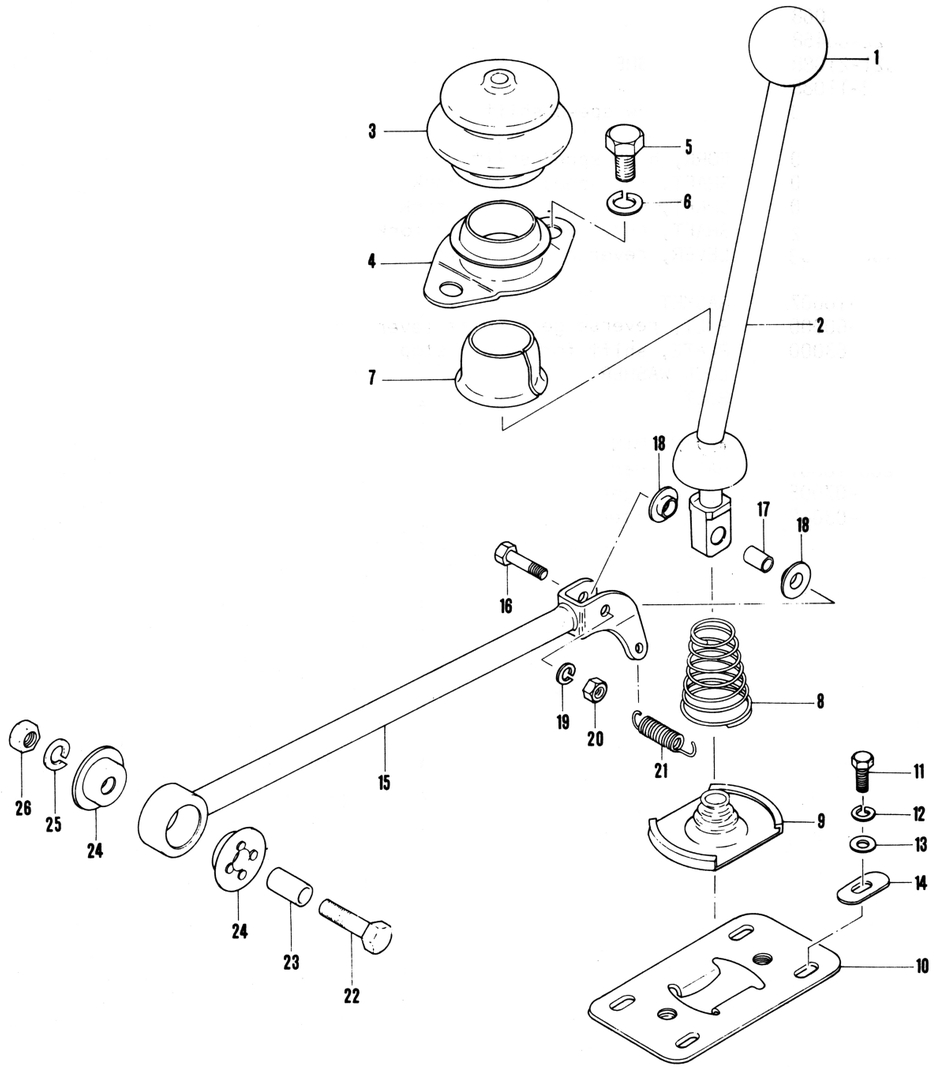

CHANGE REMOTE CONTROL

Ref.No.	Part No.	Description	Q'ty	Remarks
1	28113-63020	KNOB, gear shift lever	1	
2	28110-63002	LEVER COMP, gear shift	1	
3	28135-58000	BOOT, gear shift lever	1	
4	28180-58001	HOUSING, gear shift lever	1	
5	01122-10168	BOLT	2	
6	08321-21108	LOCK WASHER	2	
7	28115-58030	SEAT, gear shift lever	1	
8	09441-41002	SPRING, gear shift lever	1	
9	28136-58000	DUST SEAL	1	
10	28190-63000	PLATE, gear shift lever guide	1	
11	01112-06167	BOLT	4	
12	08321-21068	LOCK WASHER	4	
13	08322-21068	WASHER	4	
14	09169-07002	WASHER, guide plate	4	
15	28250-63001	SHAFT, gear shift control	1	
16	09100-06036	BOLT	1	
17	09180-06018	SPACER (1)	1	
18	09306-08002	BUSH (1)	2	
19	08321-21068	LOCK WASHER	1	
20	08311-31068	NUT	1	
21	09443-10008	SPRING, shift lever shaft	1	
22	01122-08358	BOLT	1	
23	09180-08053	SPACER (2)	1	L:22.5
24	28291- 65000	BUSH (2)	2	
25	08321-21088	LOCK WASHER	1	
26	08312-11088	NUT	1	

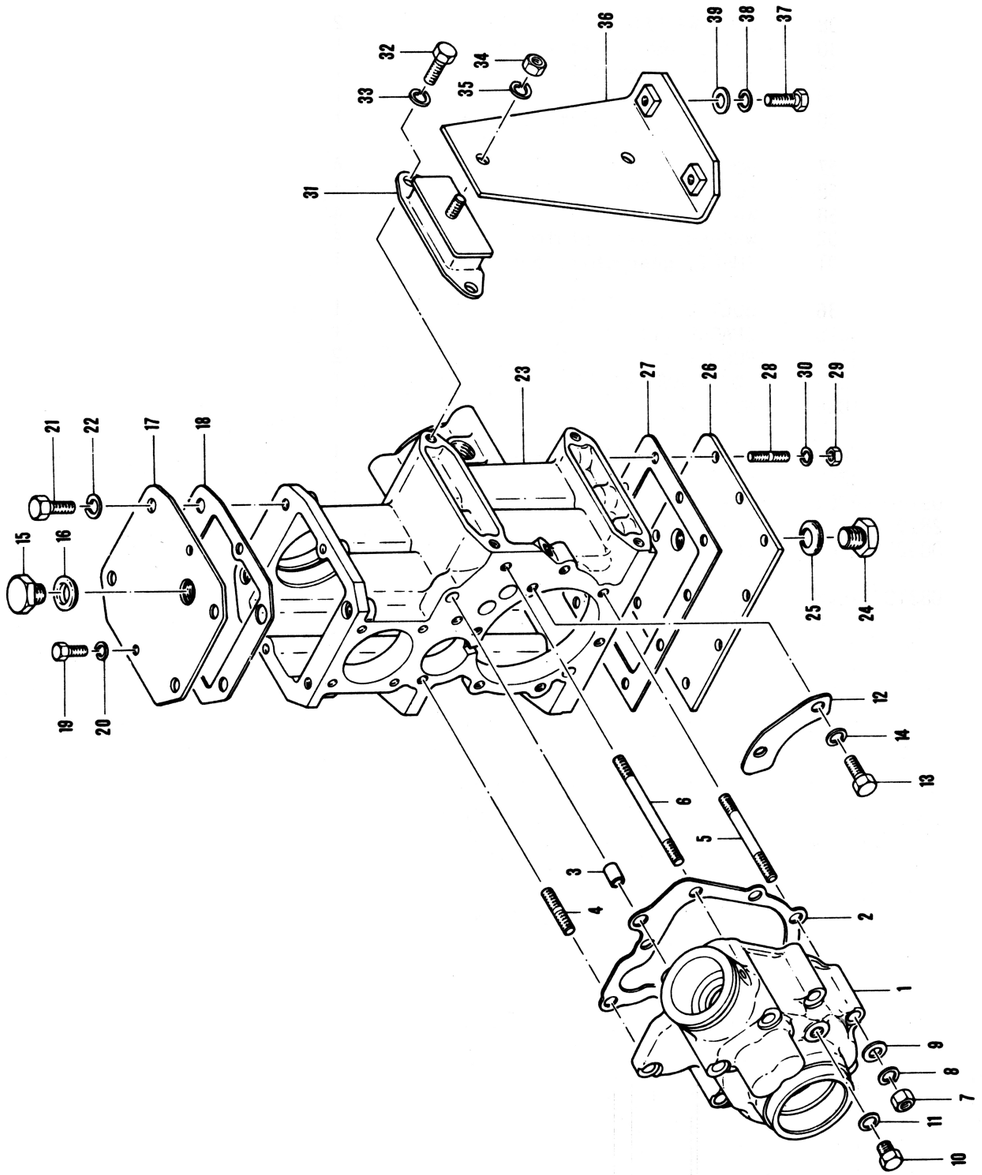

Ref.No.	Part No.	Description	Q'ty	Remarks
1	29520-63001	CASE COMP, transfer front	1	
2	29525-63001	GASKET, transfer front case	1	
3	04211-09129	DOWEL PIN	2	
4	01421-08208	STUD BOLT	1	
5	01421-08558	STUD BOLT	5	
6	01421-08758	STUD BOLT	2	
7	08312-11088	NUT	8	
8	08321-21088	LOCK WASHER	8	
9	08322-11088	WASHER	8	
10	01122-08128	PLUG, oil level	1	
11	09168-08008	GASKET	1	8.5x14x1
12	29351-63000	PLATE, stop	1	
13	01122-08208	BOLT	2	
14	08321-21088	LOCK WASHER	2	
15	09247-14008	PLUG, oil filler	1	
16	09168-14004	GASKET	1	
17	29540-63000	COVER COMP, transfercase upper	1	
18	29545-63000	GASKET, upper cover	1	
19	01111-06168	BOLT	2	
20	08321-21068	LOCK WASHER	2	
21	01121-08208	BOLT	4	
22	08321-21088	LOCK WASHER	4	
23	29510-63000	CASE COMP, transfer main	1	
24	09247-14001	DRAIN PLUG	1	
25	09168-14002	GASKET, drain plug	1	14x19x2
26	29550-63000	COVER COMP, transfer bottom	1	
27	29552-63000	GASKET, bottom cover	1	
28	01421-06128	STUD BOLT	10	
29	08312-11068	NUT	10	
30	08321-21068	LOCK WASHER	10	
31	29610-63020	MOUNTING COMP, transfer case	4	
32	01121-08208	BOLT	8	
33	08321-21088	LOCK WASHER	8	
34	08312-11088	NUT	4	
35	08321-21088	LOCK WASHER	4	
36	29620-63000	BRACKET COMP, case mounting	2	
37	01121-08208	BOLT	4	
38	08321-21088	LOCK WASHER	4	
39	08322-11088	WASHER	4	

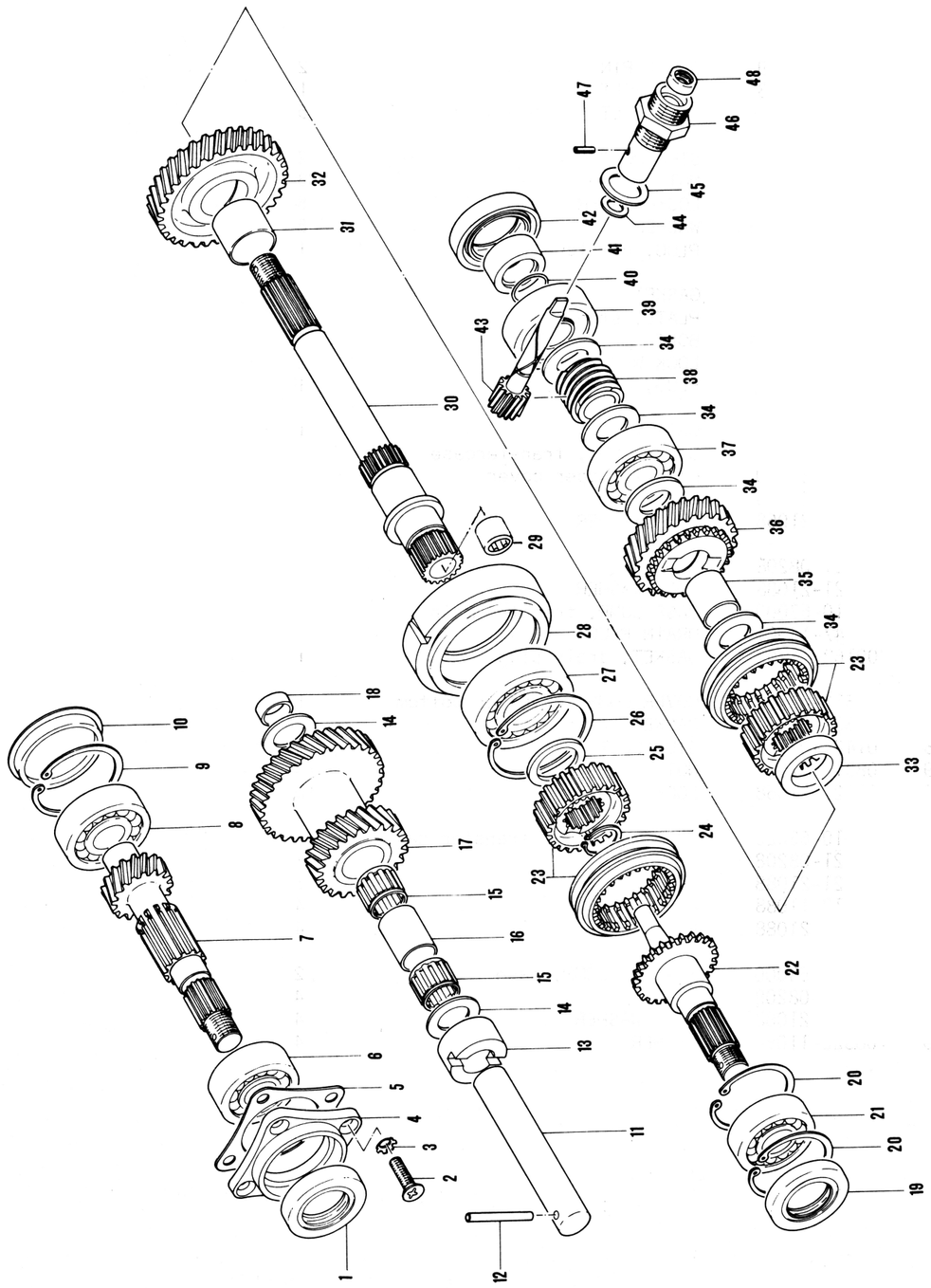

Ref.No.	Part No.	Description	Q'ty	Remarks
1	09283-28003	OIL SEAL	1	28x47x8
2	02121-06208	SCREW	4	
3	08323-31068	TOOTHED WASHER	4	
4	29531-63000	RETAINER, bearing	1	
5	29532-63000	GASKET, retainer	1	
6	08113-62040	BEARING	1	
7	29111-63000	SHAFT, transfer input	1	
8	08113-63040	BEARING	1	
9	08331-21529	CIRCLIP	1	
10	09241-52002	PLUG, bearing	1	
11	29131-63000	SHAFT, counter gear	1	
12	09202-05012	STOPPER PIN	1	OD:5, L:10
13	09300-20009	BUSH, counter shaft	1	20x35x15.2
14	09160-20021	THRUST WASHER	2	20x34x3.8
15	09263-20010	BEARING	2	20x26x19.8
16	09180-20038	SPACER, counter gear shaft	1	20.1x24.2x29.8
17	29121-63001	GEAR, transfer counter	1	
18	09241-20001	PLUG, counter shaft	1	
19	09283-28003	OIL SEAL	1	28x47x8
20	08331-21479	CIRCLIP	2	
21	08113-62040	BEARING	1	
22	29151-63001	SHAFT, output front	1	
23	24400-63806	HUB SET, rear shaft	2	
24	09380-22001	CIRCLIP, clutch hub	1	
25	09180-25028	SPACER, clutch hub	1	
26	08331-21629	CIRCLIP	1	
27	08113-63050	BEARING	1	
28	29535-63001	RETAINER, bearing	1	
29	09263-10003	BEARING, needle	1	
30	29141-63001	SHAFT, output rear	1	
31	09300-25005	BUSH, low gear	1	
32	29211-63000	GEAR, output low	1	
33	09180-25025	SPACER, clutch hub	1	
34	08211-20345	THRUST WASHER	4	
35	09300-20004	BUSH, high gear	1	
36	29221-63001	GEAR, output shaft high	1	
37	08113-63040	BEARING	1	
38	29411-63000	GEAR, speedometer drive	1	
39	09262-20032	BEARING	1	
40	09280-19001	O RING	1	ID:18.8, d:1.9
41	29143-63000	RETAINER, o ring	1	
42	09283-32009	OIL SEAL	1	32x52x10
43	29421-63000	GEAR, speedometer driven	1	
44	08211-10161	THRUST WASHER	1	
45	09168-20001	GASKET, gear case	1	
46	26111-59000	CASE, speedometer gear	1	
47	09205-02004	PIN, driven gear	1	
48	09285-10001	OIL SEAL	1	10x16x5
			1	

TRANSFER GEAR SHIFT

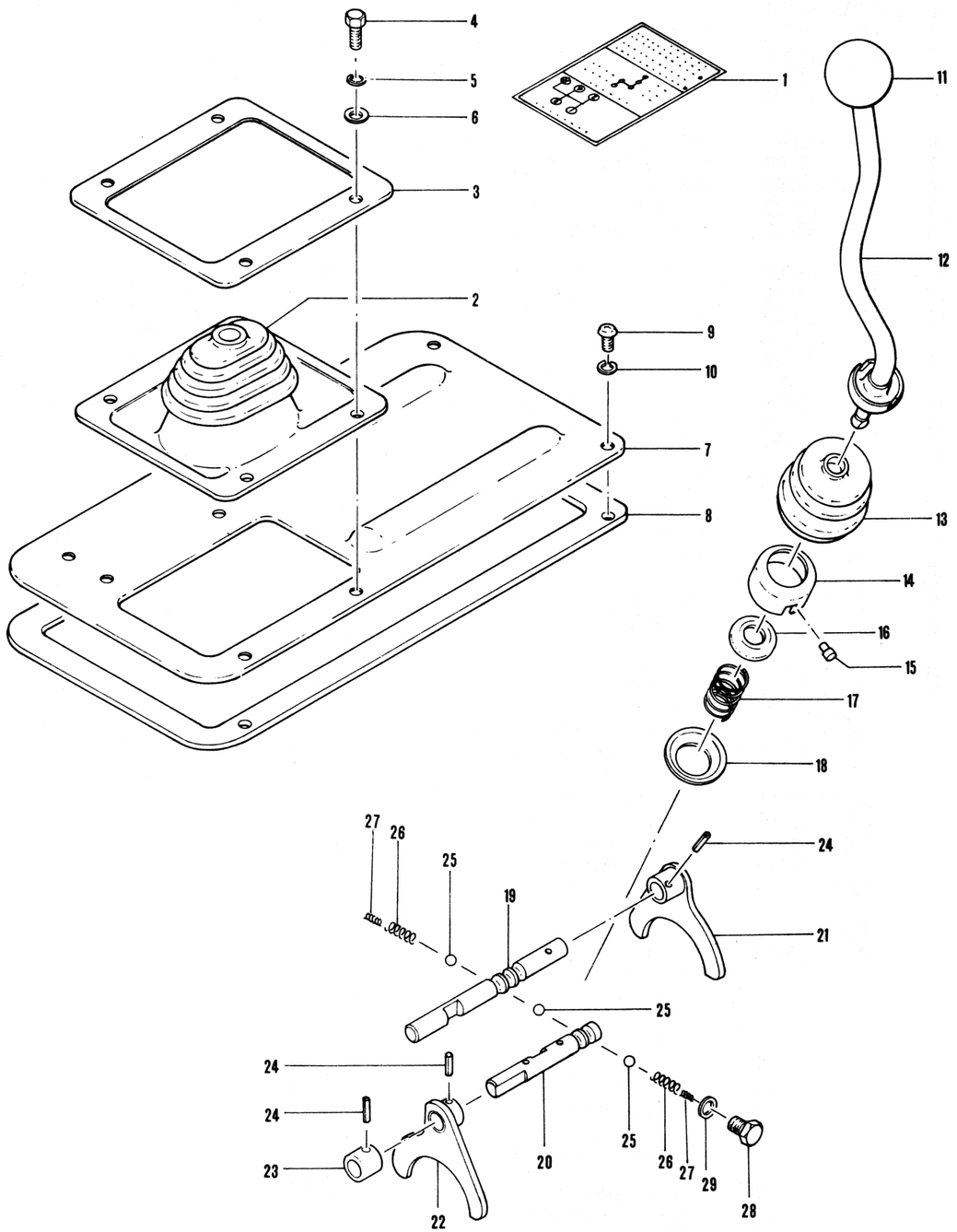

TRANSFER GEAR SHIFT

Ref.No.	Part No.	Description	Q'ty	Remarks
1	28381-63603	EMBLEM, gear shift	1	
2	28137-63000	COVER, gear shift lever	1	
3	28138-63000	FLANGE, gear shift lever cover	1	
4	01122-06208	BOLT	4	
5	08321-21068	LOCK WASHER	4	
6	08322-11068	WASHER	4	
7	66311-63000	LID, floor tunnel	1	
8	66312-63001	GASKET,floor lid	1	
9	02111-06128	SCREW	4	
10	08321-21068	LOCK WASHER	4	
11	28113-63020	KNOB, gear shift lever	1	
12	29340-63002	LEVER, transfergear control	1	
13	28135-63020	BOOTS	1	
14	28121-60000	SEAT, lever guide	1	
15	09209-06017	PIN	1	
16	28115-60000	SEAT, spring	1	
17	09440-20006	SPRING	1	
18	28116-60000	SEAT, control lever	1	
19	29331-63000	SHAFT, reduction shift	1	
20	29332-63000	SHAFT, front drive shift	1	
21	29320-63001	FORK, reduction shift	1	
22	29310-63000	FORK, front drive shift	1	
23	29314-63000	PIPE, lever stop	1	
24	09205-04003	SPRING PIN	3	
25	09260-10001	BALL	3	
26	09440-07005	SPRING, gear shift locating (1)	2	
27	09440-04001	SPRING, gear shift locating (2)	2	
28	09100-10004	PLUG, gear shift	1	
29	09168-10010	GASKET	1	

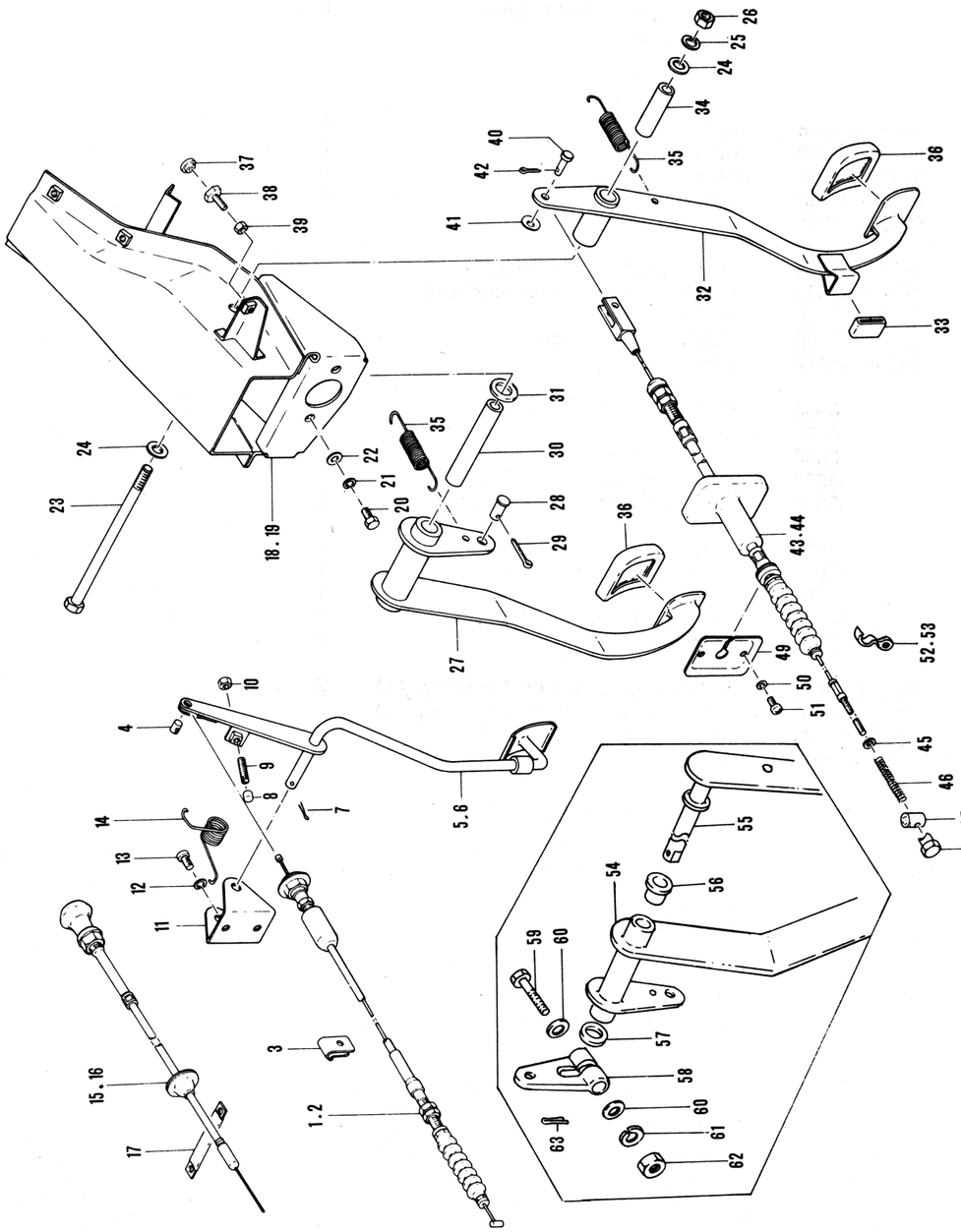

Ref.No.	Part No.	Description	Q'ty	Remarks
1	15910-63010	CABLE ASSY, accelerator	1	RHD
2	15910-63610	CABLE ASSY, accelerator	1	LHD
3	28773-61000	HOLDER, accelerator cable	1	
4	13683-51010	TERMINAL, accelerator cable	1	
5	28710-63611	PEDAL COMP, accelerator	1	RHD
6	28710-63611	PEDAL COMP, accelerator	1	LHD
7	04111-20208	COTTER PIN	1	
8	52242-51000	CAP, screw	1	
9	09134-06002	SCREW	1	
10	08311-31068	NUT	1	
11	28771-63000	BRACKET, accelerator pedal	1	
12	08321-21068	LOCK WASHER	2	
13	02112-06128	SCREW	2	
14	09448-19003	SPRING, accelerator pedal	1	
15	15930-63010	CABLE ASSY, starter	1	RHD
16	15930-63610	CABLE ASSY, starter	1	LHD
17	09403-00026	CLAMP	2	
18	28930-63000	BRACKET COMP, pedal	1	RHD
19-1	28930-63611	BRACKET COMP, pedal	1	LHD
19-2	28930-63610	BRACKET COMP, pedal	1	LHD (B.No.~21540)
20	01112-06128	BOLT	2	
21	08321-21068	LOCK WASHER	2	
22	08322-21068	WASHER	2	
23	09100-10056	PEDAL BOLT	1	10x160
24	08322-11108	WASHER	2	
25	08321-21108	LOCK WASHER	1	
26	08312-11108	NUT	1	
27	28810-63000	PEDAL COMP, brake	1	
28	09200-08006	PIN	1	
29	04111-25208	COTTER PIN	1	
30	28825-61000	SPACER	1	RHD
31	09161-16003	WASHER	1~4	16x25x0.5
32	28850-63000	PEDAL COMP, clutch	1	RHD
33	28916-63000	CUSHION, stopper	1	
34	09180-10021	SPACER, clutch pedal	1	10x15x51.2 (RHD)
35	09443-13003	SPRING, pedal	2	
36	28911-51000	PAD, pedal	2	
37	09320-03001	CUSHION, clutch pedal stopper	1	
38	09119-06003	BOLT	1	
39	08311-31068	NUT	1	
40	09200-06009	PIN, clutch pedal	1	
41	09164-08002	WASHER	1	ID:8.2, OD:16
42	04111-20158	COTTER PIN	1	
43	23710-63011	CABLE ASSY, clutch	1	RHD, L:1526
44	23710-63610	CABLE ASSY, clutch	1	LHD, L:1595

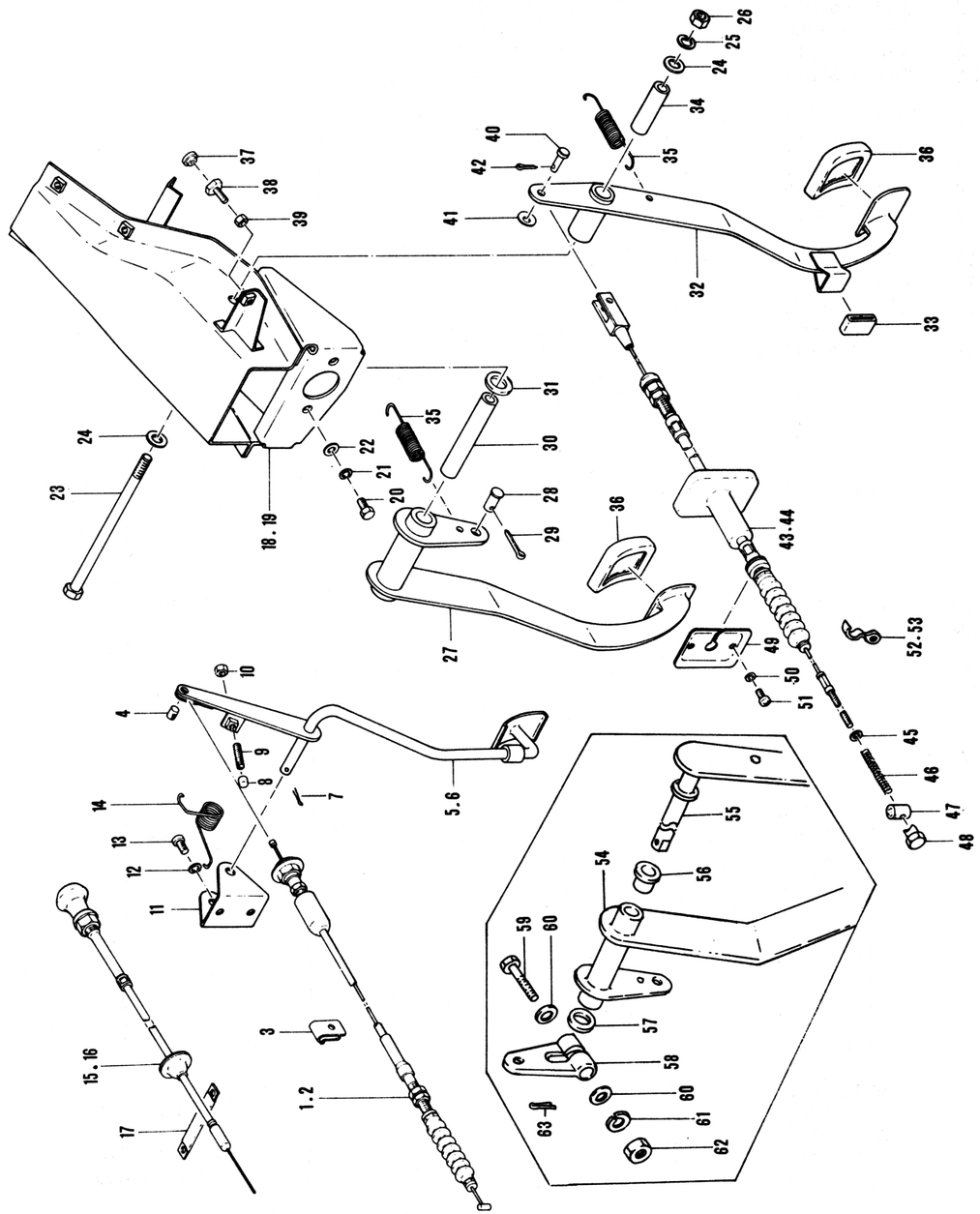

Ref.No.	Part No.	Description	Q'ty	Remarks
45	08322-11068	WASHER	1	
46	09440-08001	SPRING, clutch cable	1	
47	09209-13003	PIN, joint	1	
48	09150-06001	NUT, joint	1	
49	28913-63000	COVER, clutch pedal dust seal	1	
50	08321-21058	LOCK WASHER	2	
51	02111-05107	SCREW	2	
52	23721-63001	HOLDER, clutch wire	1	RHD
53	23721-63610	HOLDER, clutch wire	1	
54	28810-63610	PEDAL COMP, brake	1	
55-1	28850-63611	PEDAL COMP, clutch	1	
55-2	28850-63610	PEDAL COMP, clutch	1	
56	09306-14004	BUSH, clutch pedal shaft	4	
57	08322-11148	WASHER	1	
58-1	28867-63611	ARM,clutch pedal	1	
58-2	28867-63610	ARM, clutch pedal	1	LHD
59-1	09100-06063	BOLT	1	
59-2	01122-08458	BOLT	1	
60-1	08322-11068	WASHER	2	(B.No.~21540)
60-2	08322-11088	WASHER	2	
61-1	08321-11068	LOCK WASHER	1	
61-2	08321-11088	LOCK WASHER	1	
62-1	08312-11068	NUT	1	
62-2	08312-11088	NUT	1	
63	04111-30258	COTTER PIN	1	

LJ10 E1 -19-2-

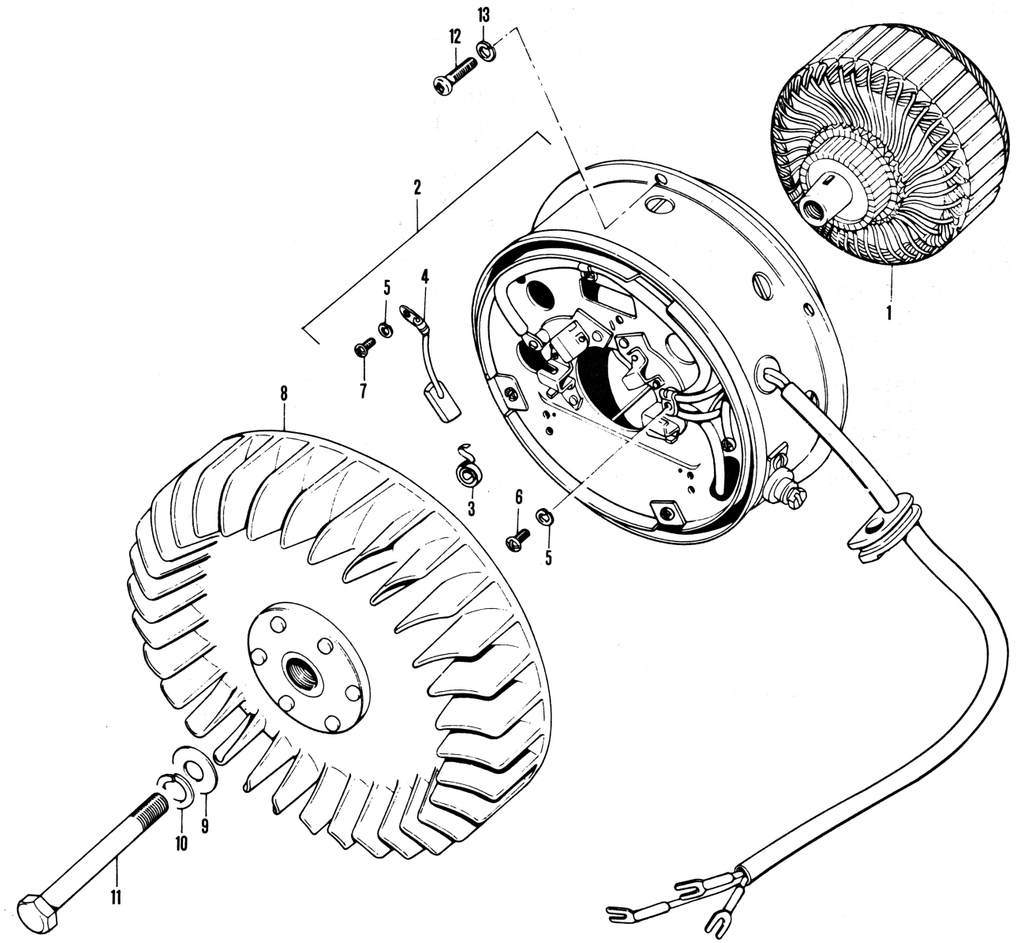

Ref.No.	Part No.	Description	Q'ty	Remarks
1	31710-52013	ARMATURE COMP	1	
2	31401-53511	STATOR ASSY	1	
3	31635-52010	•SPRING, brush	4	
4	31631-58700	•CARBON BRUSH	4	
5	08321-21048	•LOCK WASHER	4	
6	02111-04107	•SCREW	2	
7	02111-04058	•SCREW	2	
8	31761-52012	FAN COMP	1	
9	31767-58010	WASHER	1	
10	08321-21108	LOCK WASHER	1	
11	31763-52010	FAN BOLT	1	
12	02112-06168	SCREW	5	
13	08321-21068	LOCK WASHER	5	

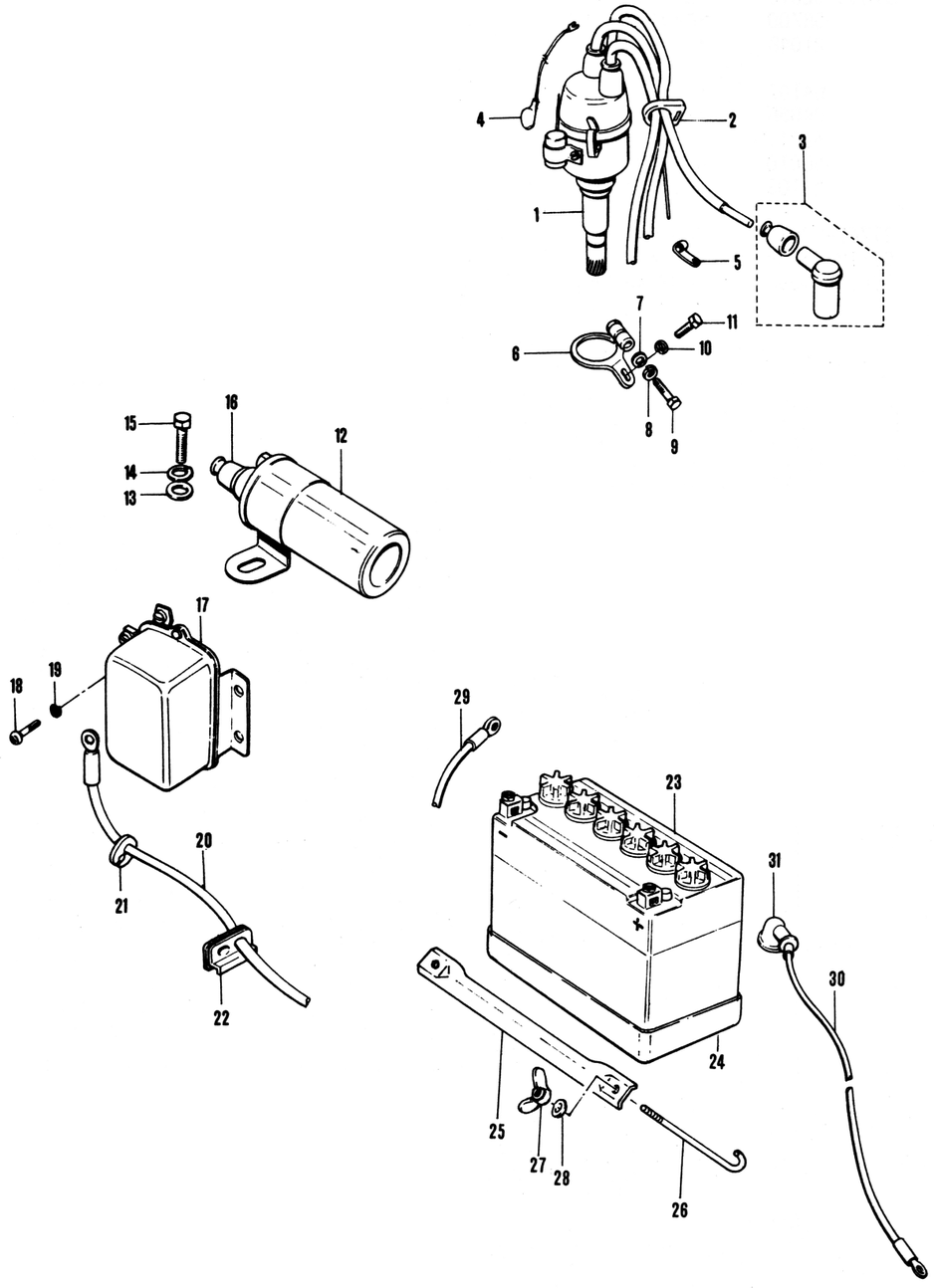

VOLTAGE REGULATOR - IGNITION

Ref.No.	Part No.	Description	Q'ty	Remarks
1	33100-52510	DISTRIBUTOR ASSY	1	
2	33881-58002	CLAMP, high tension cord	1	
3	33500-69810	CAP ASSY, spark plug	1	
4	36810-52051	CORD COMP, distributor	1	
5	09403-05303	CLAMP, high tension cord	1	
6	33460-52500	CLAMP, distributor	1	
7	08322-11068	WASHER	1	
8	08321-21068	LOCK WASHER	1	
9	01112-06408	BOLT	1	
10	08321-21068	LOCK WASHER	1	
11	01112-06128	BOLT	1	
12	33410-52012	COIL ASSY, ignition	1	
13	09160-06003	WASHER, ignition	2	6.7x16x0.8
14	08321-21068	LOCK WASHER	2	
15	01112-06128	BOLT	2	
16	33418-51012	INSULATOR	1	
17	32500-64010	REGULATOR ASSY, voltage	1	
18	02112-06108	SCREW	3	
19	08321-21068	LOCK WASHER	3	
20	33821-54150	CABLE, starter generator	1	
21	09309-08001	GROMMET, wire harness	1	
22	09309-09004	GROMMET, generator cable	1	
23	33610-64010	BATTERY ASSY	1	12V, 24AH
24	33611-51020	TRAY, battery	1	
25	85822-63000	BAND, battery	1	
26	85821-58001	BOLT, battery	2	
27	08317-11058	WING NUT	2	
28	08321-21058	LOCK WASHER	2	
29	33851-52050	CABLE, battery ground	1	
30	33821-52054	CABLE, battery plus	1	
31	33816-65000	INSULATOR, battery plus cable	1	

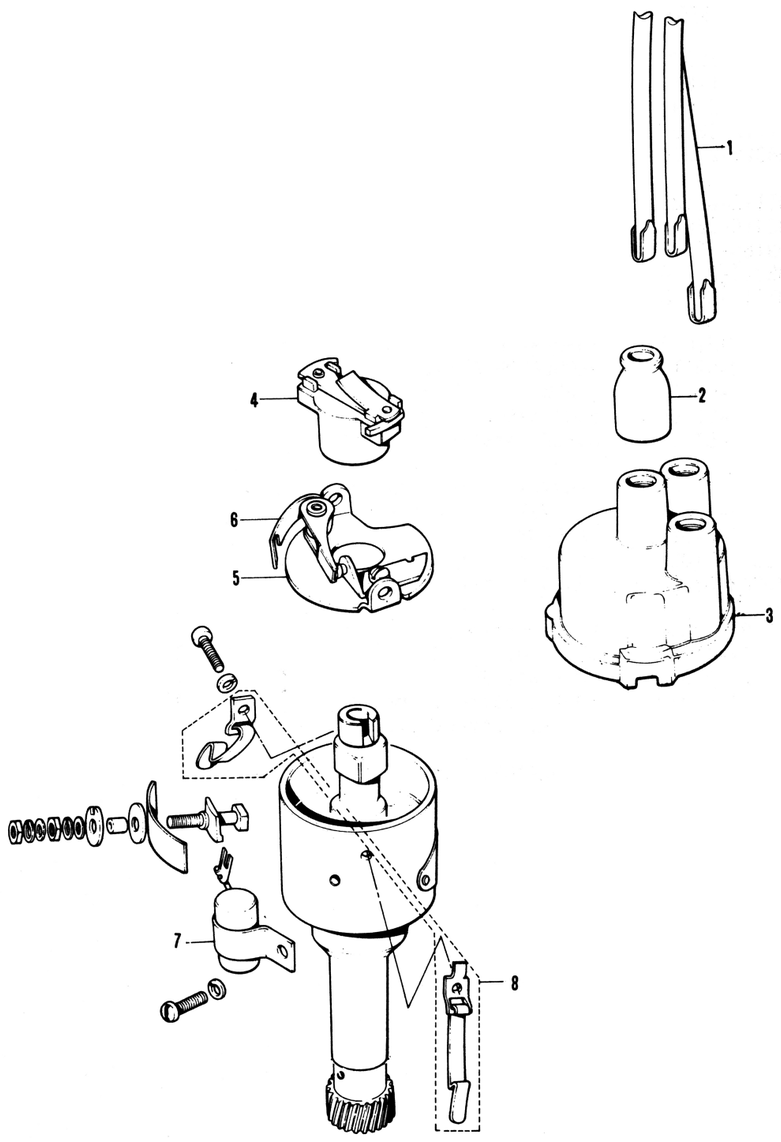

DISTRIBUTOR INNER PARTS

Ref.No.	Part No.	Description	Q'ty	Remarks
1	33710-53011	CORD COMP, high tension	3	
2	33322-52012	INSULATOR	3	
3	33321-52012	DISTRIBUTOR CAP	1	
4	33310-52010	ROTOR, distributor	1	
5	33100-52837	BREAKER ASSY	1	
6	33140-52011	•POINT ASSY, contact	1	
7	33261-52011	CONDENSER	1	
8	33250-52010	SPRING, cap retainer	1	

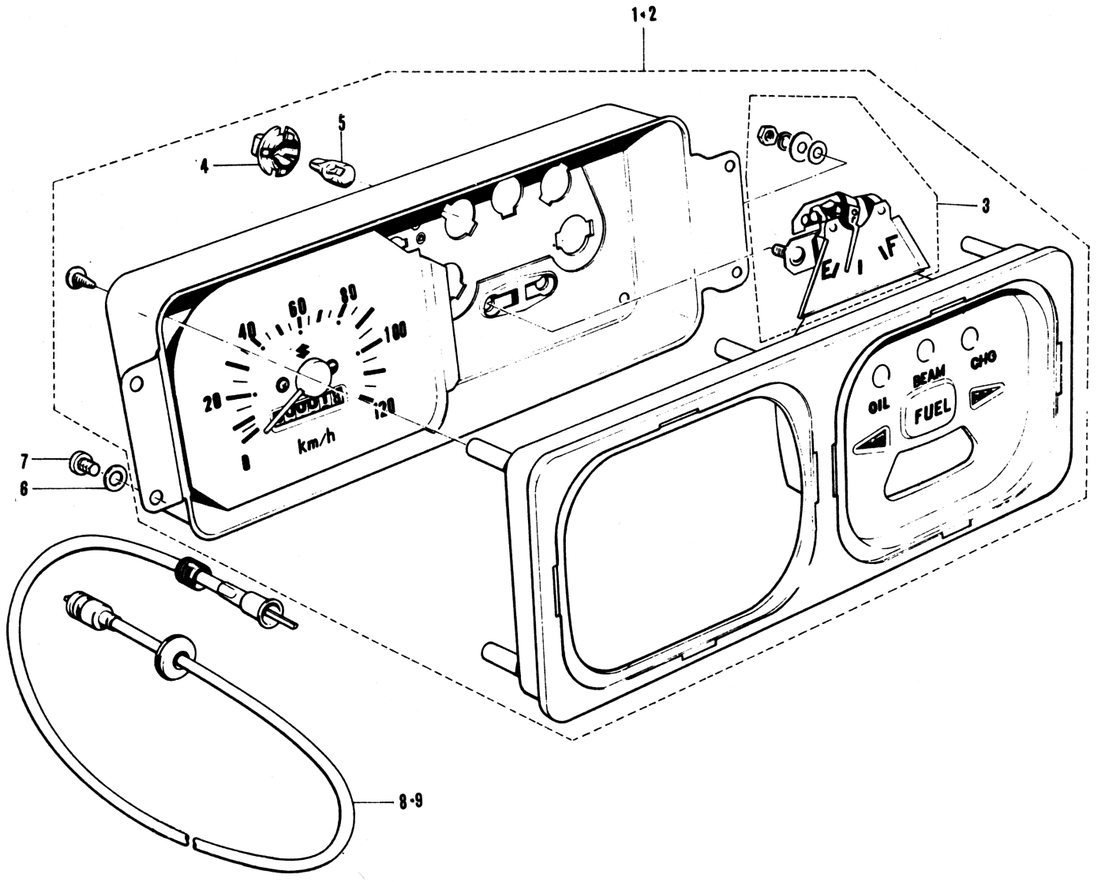

SPEEDOMETER

Ref.No.	Part No.	Description	Q'ty	Remarks
1	34100-61020	SPEEDOMETER ASSY	1	Kilo Scale
2	34100-58602	SPEEDOMETER ASSY	1	Mile Scale
3	34320-60010	•BODY ASSY, fuel meter	1	
4	34173-60010	•SOCKET, speedometer valve	6	
5	09471-12028	•VALVE, speedometer	6	
6	08322-21048	WASHER	4	
7	02111-04108	SCREW	4	
8	34910-63031	CABLE ASSY, speedometer	1	L:2650, RHD
9	34910-63610	CABLE ASSY, speedometer	1	L:2250, LHD

LJ10 E1 -23-

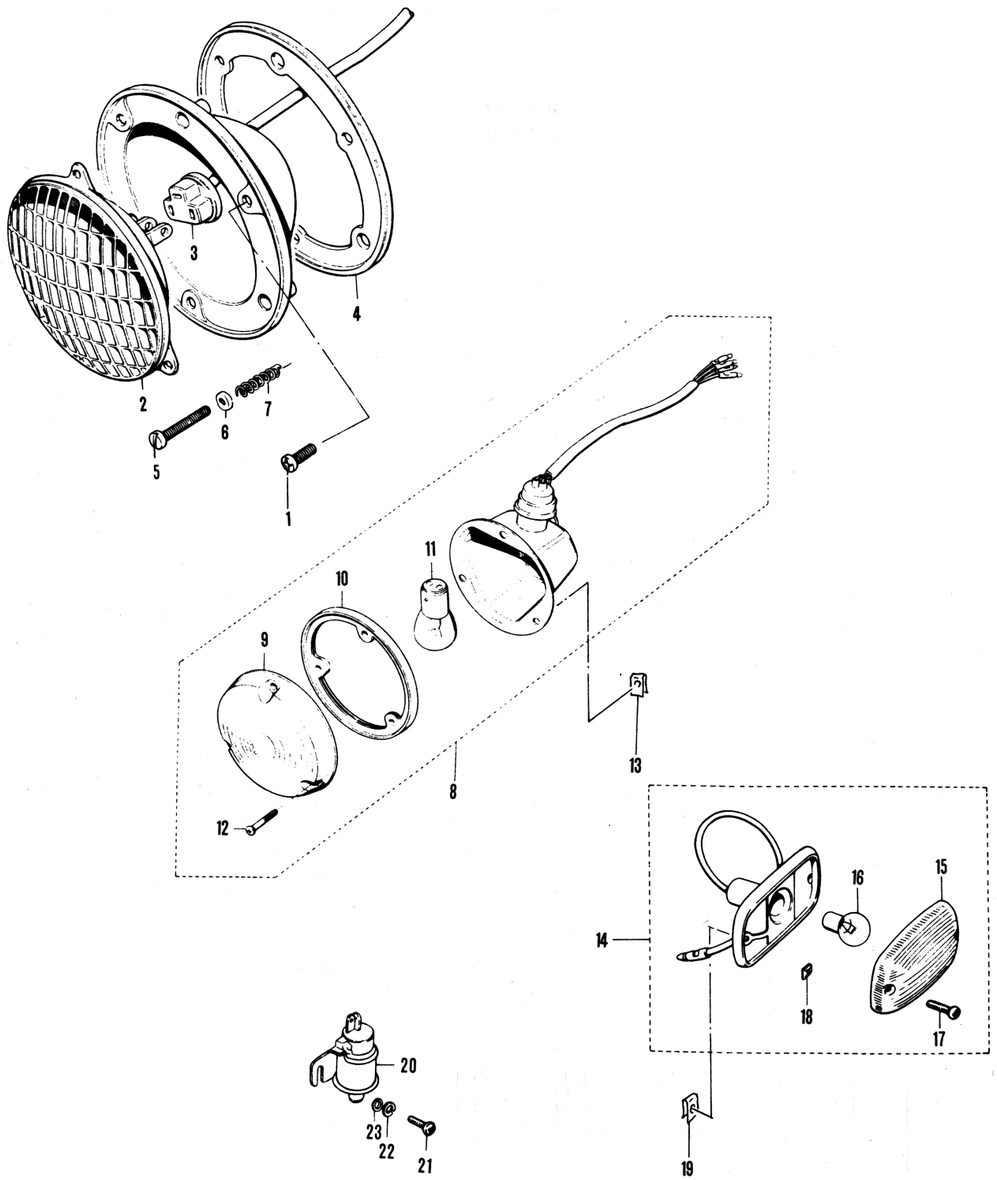

Ref.No.	Part No.	Description	Q'ty	Remarks
1	02111-05108	SCREW	6	
2	35121-52321	LAMP UNIT, sealed beam	2	
3	35170-53220	WIRE COMP, head lamp	2	
4	35142-53022	GASKET	2	
5	35151-52021	SCREW	6	
6	35157-52020	LOCK WASHER	6	
7	35154-52020	SPRING	6	
8	35601-63012	LAMP ASSY, front turn signal	2	
9	35612-58010	•LENS	2	
10	35613-58010	•GASKET	2	
11	09471-12002	•VALVE	2	12v, 23/8W(A-4879)
12	36425-60010	•SCREW	6	
13	09148-04009	NUT	6	
14	36410-58012	LAMP ASSY, side turn signal	2	
15	36412-60010	•LENS	2	
16	09471-12007	•VALVE	2	12V, 6W (A-524)
17	02113-04167	•SCREW	4	
18	36421-60011	•NUT, earth	2	
19	09148-04011	NUT	4	
20	38610-59010	RELAY ASSY, turn signal	1	
21	02111-06128	SCREW	2	
22	08322-21068	LOCK WASHER	2	
23	08322-21068	WASHER	2	

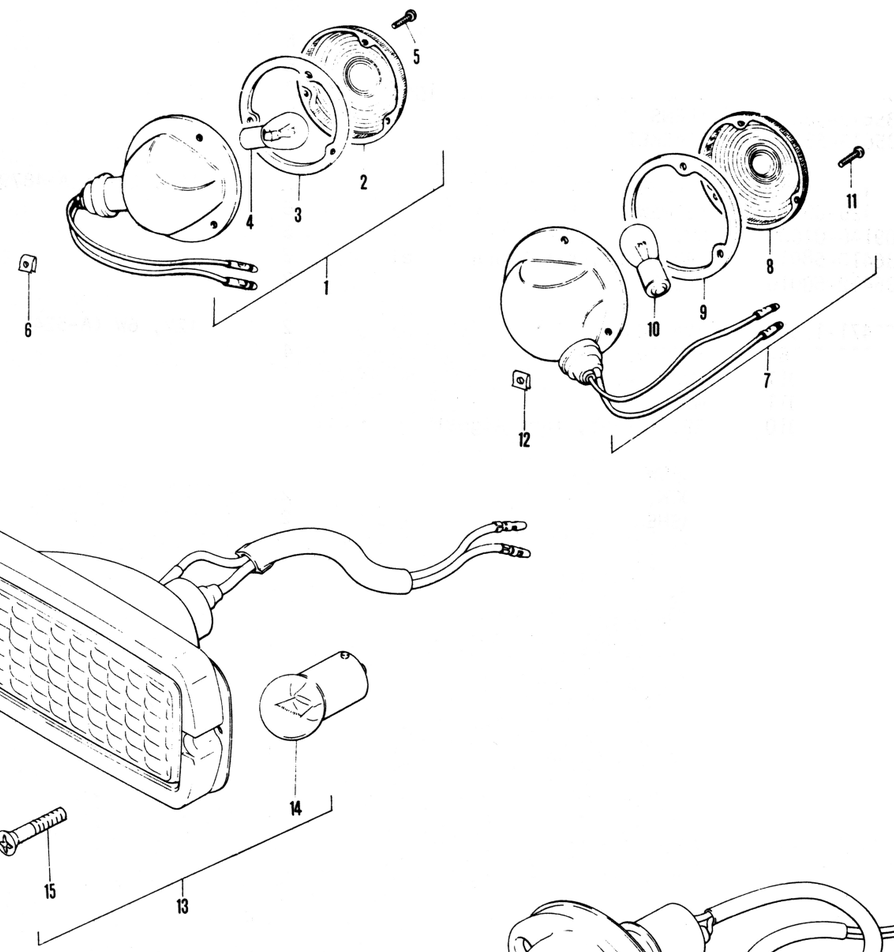

REAR LAMP

Ref.No.	Part No.	Description	Q'ty	Remarks
1	35603-61110	LAMP ASSY, tail/turn signal	2	
2	35652-53010	•LENS	2	
3	35613-58010	•GASKET	2	
4	09471-12002	•VALVE	2	12V, 23/8W(A-4879)
5	35665-60010	•SCREW	6	
6	09148-04009	NUT	6	
7	35801-61110	LAMP ASSY, tail stop	2	
8	35712-54013	•LENS	2	
9	35613-58010	•GASKET	2	
10	09471-12006	•VALVE	2	12V, 23W(A-4577A)
11	35665-60010	•SCREW	6	
12	09148-04009	NUT	6	
13	36250-61030	LAMP ASSY, back up	1	
14	09471-12003	•VALVE	1	12V, 10W(A-4125)
15	02133-04207	•SCREW	2	
16	35910-61011	LAMP ASSY, licence	1	
17	09471-12003	•VALVE	1	12V, 10W(A-4125)
18	02133-04127	•SCREW	2	

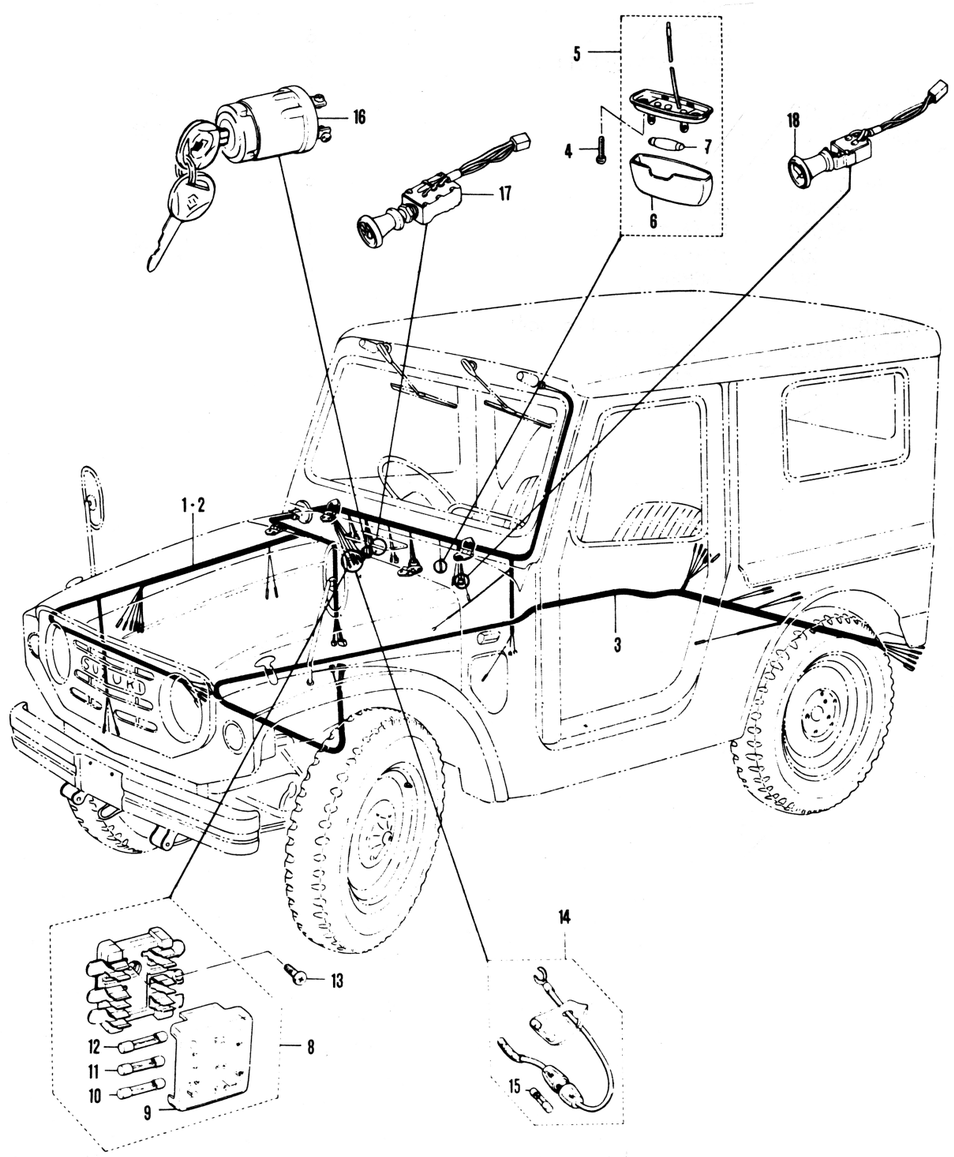

SWITCH - WIRING HARNESS

Ref.No.	Part No.	Description	Q'ty	Remarks
1-1	36610-63003	WIRING HARNESS (1)	1	RHD
1-2	36610-63002	WIRING HARNESS (1)	1	RHD, B.No.~21509
2-1	36610-63612	WIRING HARNESS (1)	1	LHD
2-2	36610-63610	WIRING HARNESS (1)	1	LHD, B.No.~21509
3	36620-63002	WIRING HARNESS (2)	1	
4	02111-04127	SCREW	2	
5	36210-51011	LAMP ASSY, room	1	
6	36212-51011	·LENS	1	
7	09471-12005	·VALVE	1	
8	36710-61020	BOX ASSY, fuse	1	
9	36717-51024	·COVER, fuse box	1	
10	09481-05001	·FUSE 5A	1	
11	09481-10001	·FUSE 10A	1	
12	09481-15001	·FUSE 15A		
13	02111-05127	SCREW	1	
14	36740-64010	CASE ASSY, fuse	1	
15	09481-20001	·FUSE 20A	1	
16	37110-58011	SWITCH ASSY, ignition	1	
17	37210-58012	SWITCH ASSY, lighting	1	
18	37310-58012	SWITCH ASSY, wiper	1	

LJ10 E1 -26-

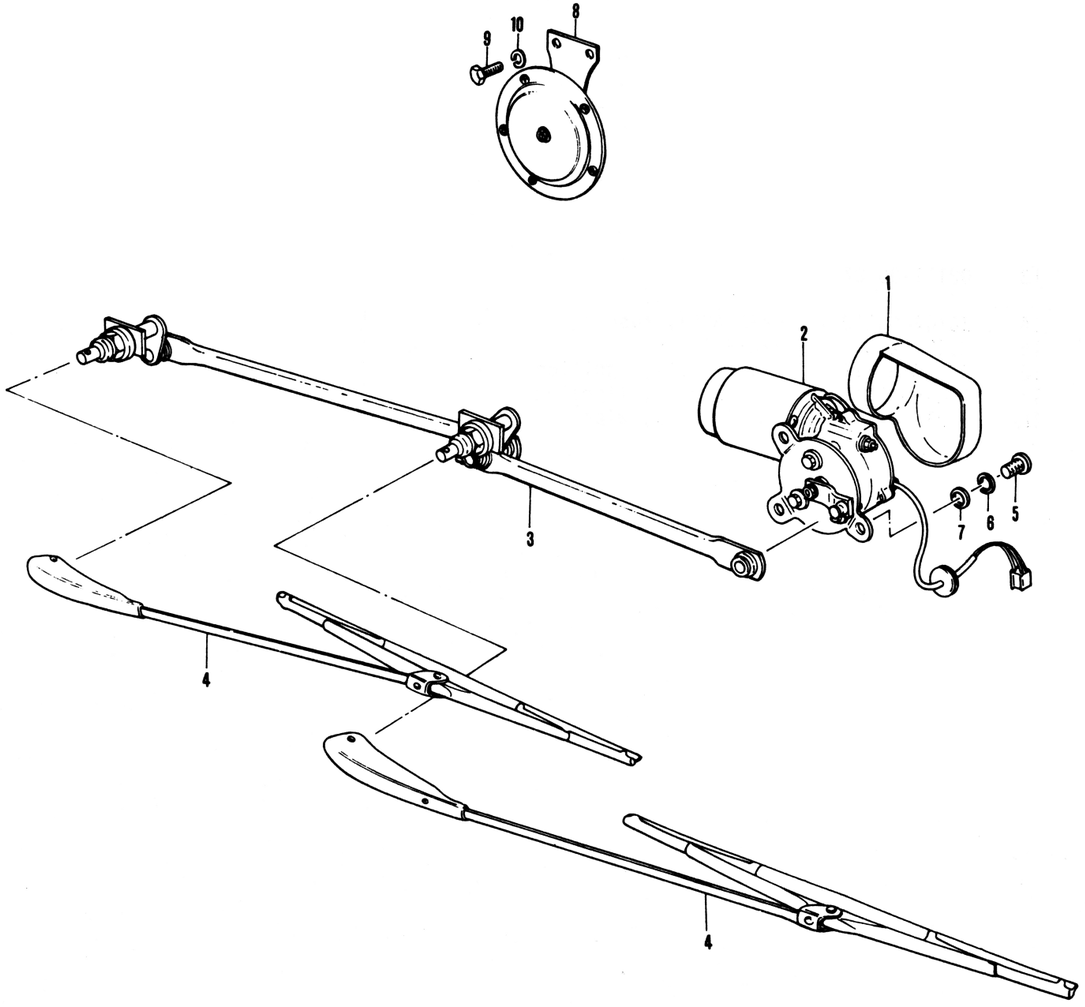

WINDOW SHIELD WIPER - HORN

Ref.No.	Part No.	Description	Q'ty	Remarks
1	38280-63000	COVER, wiper motor	1	
2	38101-63822	MOTOR SET, wiper	1	
3	38102-63011	LINK ASSY, wiper	1	
4	38310-63040	WIPER/BLADE ASSY	2	
5	02112-06108	SCREW	3	
6	08321-21068	LOCK WASHER	3	
7	08322-21068	WASHER	3	
8	38500-58011	HORN ASSY	1	
9	01112-06128	BOLT	2	
10	08321-21068	LOCK WASHER	2	

LJ10 E1 -27-

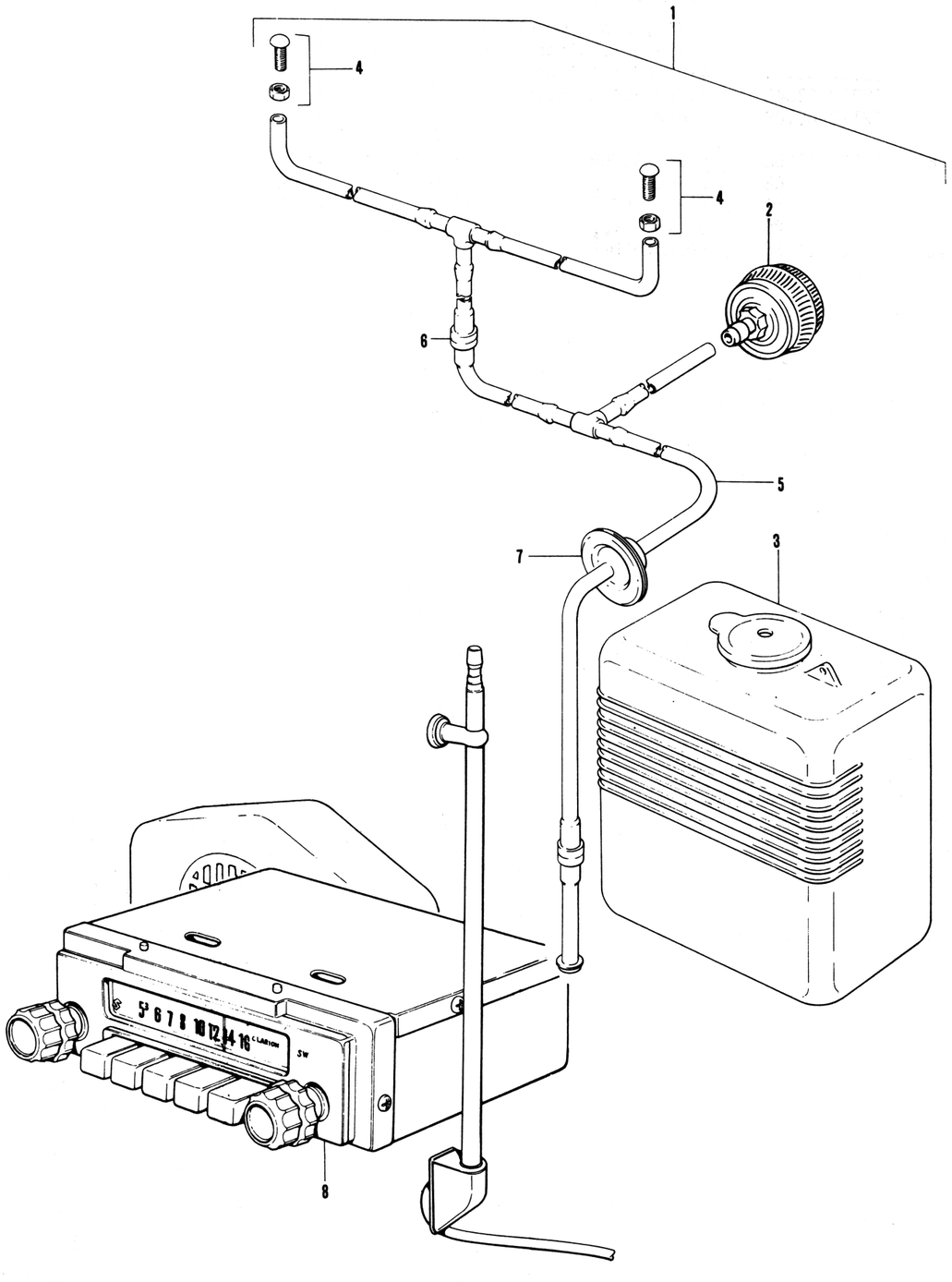

WINDOW SHIELD WASHER - RADIO

Ref.No.	Part No.	Description	Q'ty	Remarks
1-1	38400-63820	WASHER ASSY, window shield	1	
1-2	38400-63804	WASHER ASSY, window shield	1	B.No.~20623
2	38440-61824	·PUMP SET, washer	1	
3	38450-52854	·TANK SET, washer	1	
4-1	38480-58110	·NOZZLE ASSY, window shield	2	
4-2	38480-55011	·NOZZLE ASSY, window shield	1	B.No.~20623
5	38490-62806	·PIPE SET, washer	1	
6	38498-58111	··VALVE	2	
7	09308-05002	GROMMET	1	
8	39100-63700	RADIO ASSY	1	OPT

LJ10 E1 -28-

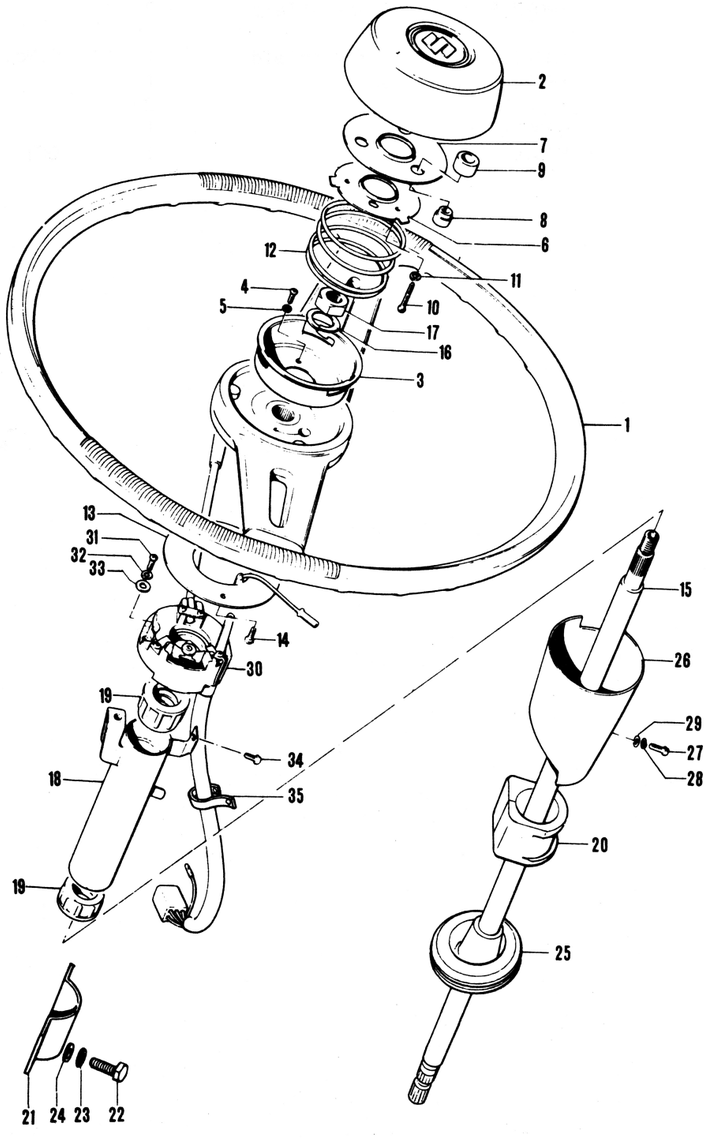

STEERING UNIT

Ref.No.	Part No.	Description	Q'ty	Remarks
1-1	48111-64010	WHEEL, steering (ID)	1	ID:13.5
1-2	48111-60010	WHEEL, steering	1	ID:12.5, B.No.~15197
2	48120-60100	BUTTON COMP, horn	1	
3	48141-60000	CUP, horn contact	1	
4	02111-03068	SCREW	2	
5	08321-21038	LOCK WASHER	2	
6	48142-60000	PLATE, horn button set	1	
7	48143-60000	PLATE, horn contact	1	
8	48144-60000	INSULATOR, contact plate	3	
9	48145-60000	CUSHION, horn contact	3	
10	02112-03168	SCREW	3	
11	08321-21038	LOCK WASHER	3	
12	48151-60000	SPRING, horn button	1	
13	48152-60000	RING, horn button spring	1	
14	03211-03108	SCREW	3	
15-1	48211-63001	SHAFT COMP, steering (OD)	1	OD:14.6
15-2	48211-63000	SHAFT COMP, steering	1	OD:13.8, B.No.~15197
16	08321-21128	LOCK WASHER	1	
17	08312-31128	NUT	1	
18	48310-63000	COLUMN COMP, steering	1	
19	48381-51040	BUSH, steering column	1	
20	48361-60000	BUSH, steering column support	2	
21	48351-63000	BRACKET, column surport	2	
22	01112-06207	BOLT	4	
23	08321-21068	LOCK WASHER	4	
24	08322-21068	WASHER	4	
25	48491-63000	RUBBER, steering shaft seal	1	
26	48411-61080	COVER, steering	1	
27	02111-04107	SCREW	1	
28	08321-21048	LOCK WASHER	1	
29	08322-21048	WASHER	1	
30	37400-60011	SWITCH ASSY, turn signal	1	
31	03211-04108	SCREW	1	
32	08321-21048	LOCK WASHER	1	
33	08322-21048	WASHER	2	
34	02111-04168	SCREW	1	
35	09403-00026	CLAMP	1	

LJ10 EI

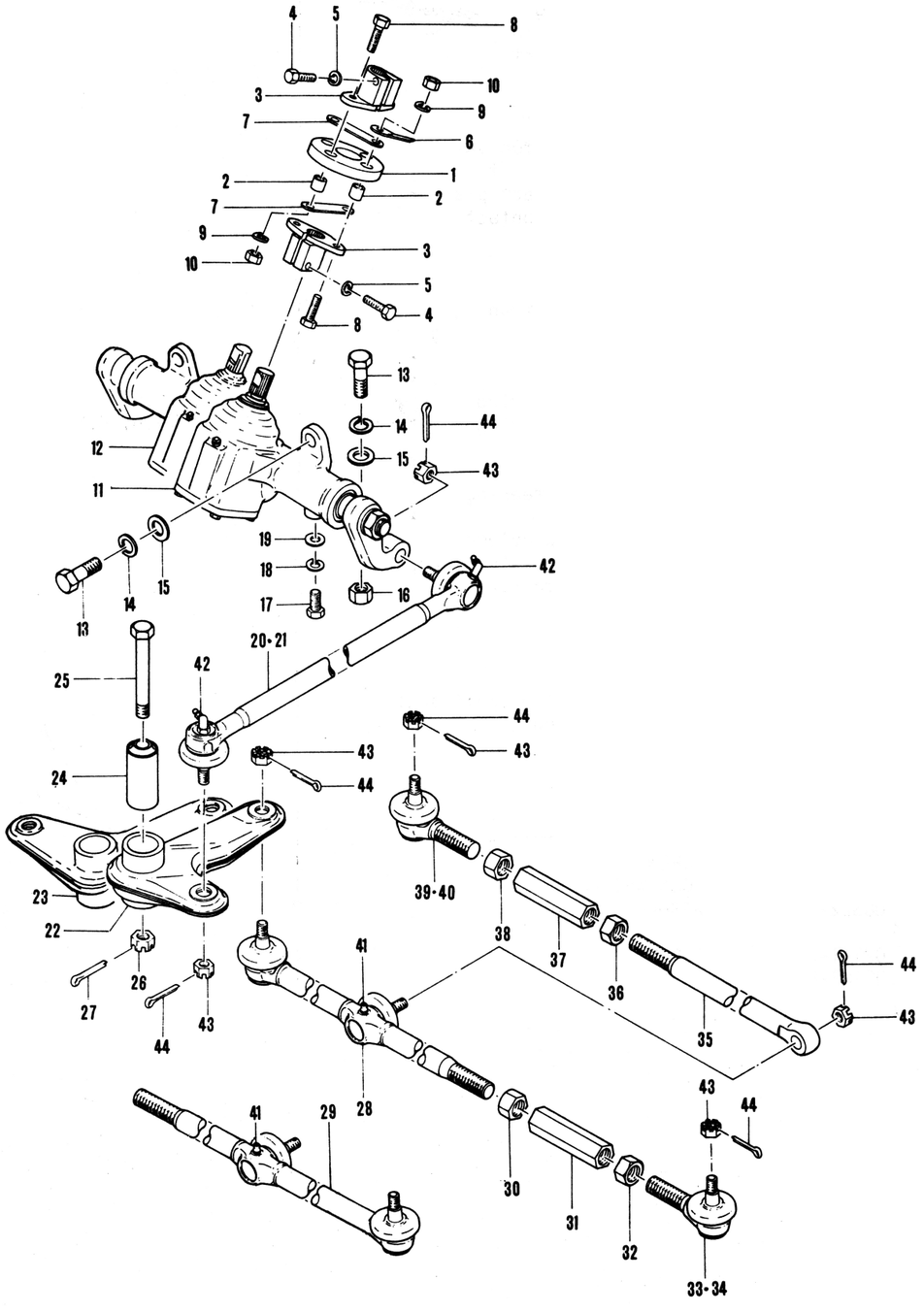

Ref.No.	Part No.	Description	Q'ty	Remarks
1	48250-70810	JOINT, steering rubber	1	
2	09180-08007	SPACER, steering joint	4	8x11x9
3	48270-52000	FLANGE, steering joint	2	
4	09100-08075	BOLT	2	
5	08321-31088	LOCK WASHER	2	
6	48283-51002	SPRING, horn earth	1	
7	48262-58000	PLATE, steering joint	2	
8	01122-08258	BOLT	4	
9	08321-31088	LOCK WASHER	4	
10	08312-11088	NUT	4	
11	48600-63040	BOX ASSY, steering gear	1	RHD
12	48600-63640	BOX ASSY, steering gear	1	LHD
13	09100-12111	BOLT	3	12x35
14	08321-31128	LOCK WASHER	3	
15	08322-11128	WASHER	3	
16	09140-12011	NUT	1	
17	01122-10208	BOLT	1	
18	08321-31108	LOCK WASHER	1	
19	08322-11108	WASHER	1	
20	48900-63000	ROD COMP, drag (RHD)	1	L:564
21	48900-63610	ROD COMP, drag (LHD)	1	L:569
22	48710-63002	LEVER, steering tie rod	1	RHD
23	48710-63610	LEVER, steering tie rod	1	LHD
24	09319-12011	BUSH, tie rod lever	1	
25	09101-12101	BOLT	1	12x91
26	09141-12001	NUT	1	
27	04111-30258	COTTER PIN	1	
28	48850-63001	TIE ROD, LH	1	RHD
29	48850-63610	TIE ROD, LH	1	LHD
30	08312-11168	NUT	1	
31	48836-63001	CONNECTER, tie rod end	1	
32	09140-16008	NUT	1	left screw
33	48820-63001	END COMP, tie rod LH	1	RHD
34	48820-63610	END COMP, tie rod LH	1	LHD
35	48831-63001	TIE ROD, steering RH	1	
36	09140-16008	NUT	1	left screw
37	48836-63001	CONNECTER, tie rod end	1	
38	08312-11168	NUT	1	
39	48810-63001	END COMP, RH tie rod	1	RHD
40	48820-63002	END COMP, RH tie rod	1	LHD
41	08351-21008	GREASE NIPPLE	1	
42	08351-31008	GREASE NIPPLE	5	
43	09141-10003	NUT	6	
44	04111-25208	COTTER PIN	6	

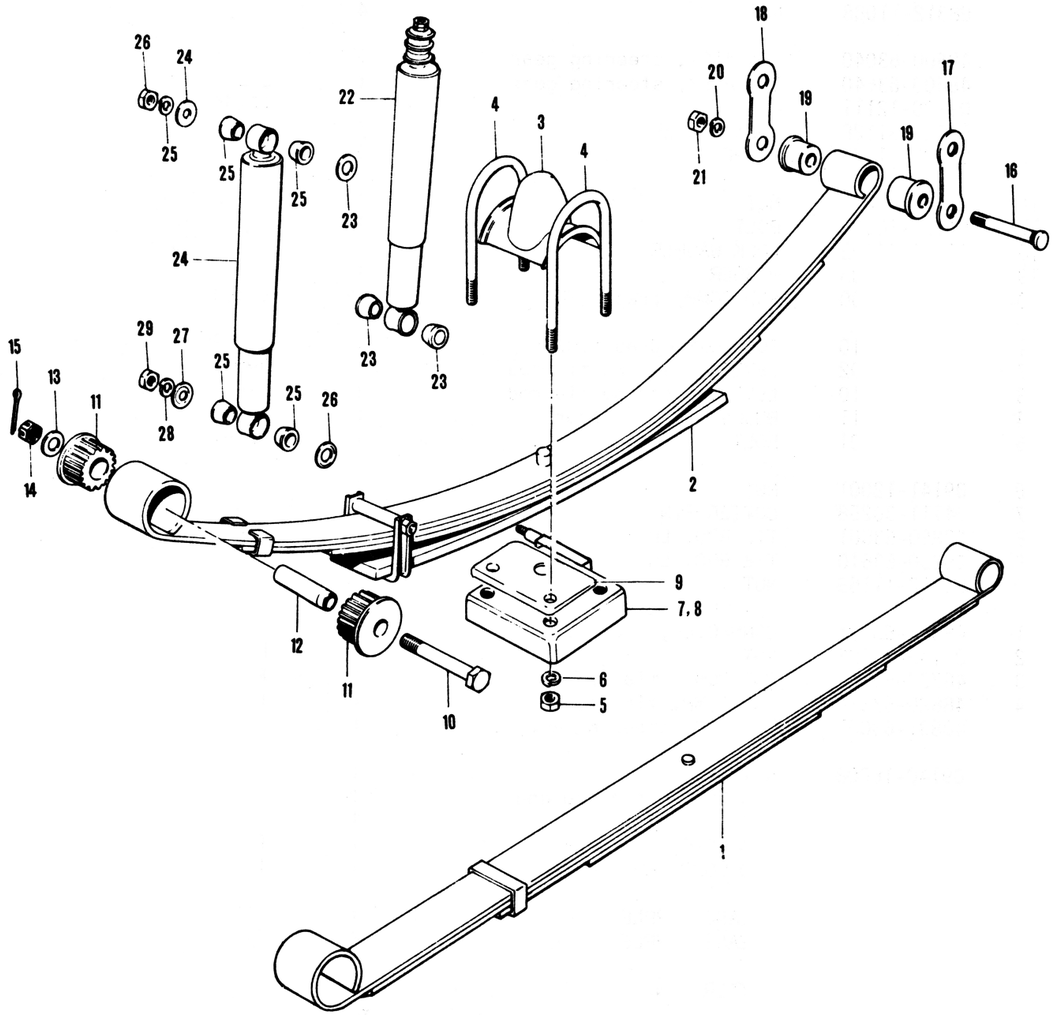

Ref.No.	Part No.	Description	Q'ty	Remarks
1	41110-63011	SPRING ASSY, front	2	
2	41310-63011	SPRING ASSY, rear	2	
3	42150-61040	BUMPER COMP, spring	4	
4	41411-61000	U BOLT	8	H:123
5	09140-10004	NUT	16	
6	08321-31108	LOCK WASHER	16	
7	41230-63000	SEAT COMP, spring RH	2	
8	41240-63000	SEAT COMP, spring LH	2	
9	45511-63700	SHIM, camber adjust	0~2	
10	09101-12105	BOLT	4	L:87
11	41331-62020	BUSH	8	
12	09180-12035	SPACER, spring	4	12x16x64.5
13	08322-11128	WASHER	4	
14	08314-41128	NUT	4	
15	04111-30258	COTTER PIN	4	
16	41463-52000	SHACKLE PIN	8	
17	41462-67000	PLATE, shackle outer	4	ID:13
18	41461-67000	PLATE, shackle inner	4	ID:10
19	09305-13002	BUSH	16	30x32
20	08321-31108	LOCK WASHER	8	
21	08312-11108	NUT	8	
22	41600-63010	ABSORBER ASSY, front shock	2	
23	41781-52010	·BUSH, absorber	4	
24	41700-63010	ABSORBER ASSY, rear shock	2	
25	41781-52010	·BUSH, absorber	8	
26	09164-17001	WASHER, shock absorber (2)	6	ID:17, OD:34
27	09164-13003	WASHER, shock absorber (1)	6	ID:13, OD:34
28	08321-31128	LOCK WASHER	6	
29	08312-11128	NUT	6	

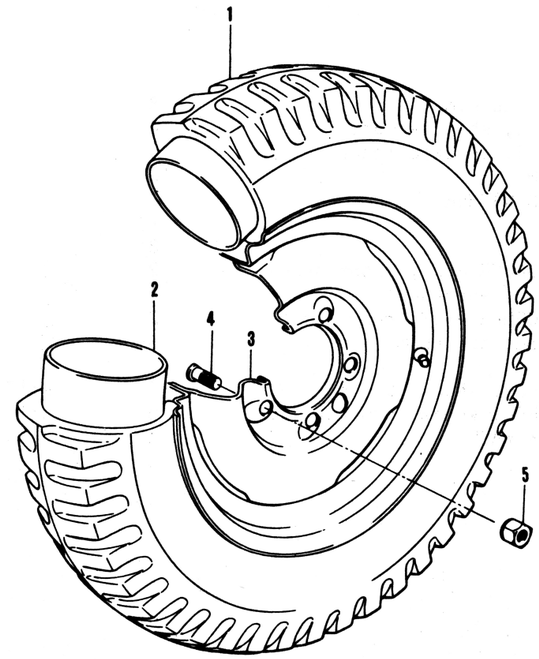

WHEEL RIM - TIRE

Ref.No.	Part No.	Description	Q'ty	Remarks
1	43110-63031	TIRE	5	6.00-16, 4PR
2	43120-63030	TUBE	5	6.00-16
3	43210-63050	RIM ASSY, wheel	5	4.50E x 16
4	09119-12003	BOLT	20	
5	09140-12013	NUT	20	

LJ10 E1 -32-

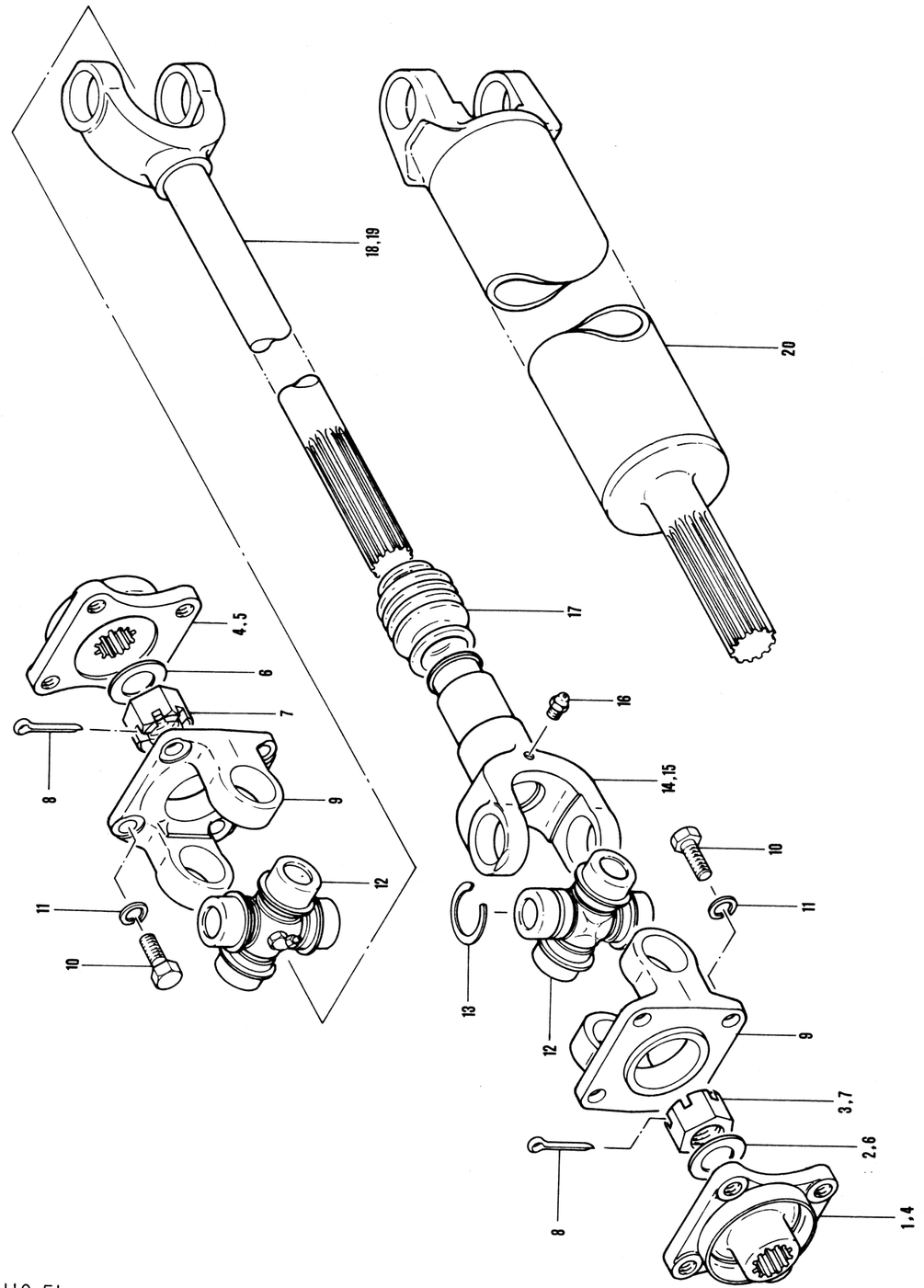

UNIVERSAL JOINT - DRIVE SHAFT

Ref.No.	Part No.	Description	Q'ty	Remarks
1	27110-61000	FLANGE, universal joint	1	ID:17.5(Transmission case)
2	09160-16006	WASHER	1	16x30x2.6
3	08314-41168	NUT	1	
4	27110-60001	FLANGE, universal joint	2	ID:20.5(Transfer case)
5	27110-63000	FLANGE, universal joint	2	(DIFF case)
6	09160-14009	WASHER	5	
7	08314-41148	NUT	5	
8	04111-30308	COTTER PIN	5	
9	27131-52000	YOKE, cross joint flange	5	
10	09100-08013	BOLT	24	
11	08321-21088	LOCK WASHER	24	
12	27201-58833	JOINT ASSY, universal	6	
13	09380-25005	·CIRCLIP	24	
14	27140-52000	YOKE COMP, sliding (1)	1	OD:30, L:110
15	27140-58000	YOKE COMP, sliding (2)	2	OD:32, L:130
16	08351-21008	GREASE NIPPLE	3	
17	27153-62020	BOOT, propeller shaft	3	
18	27170-63000	SHAFT COMP, propeller (1)	1	L:316
19	27150-63001	SHAFT COMP, front propeller	1	L:512
20	27160-63000	SHAFT COMP, rear propeller	1	L:470

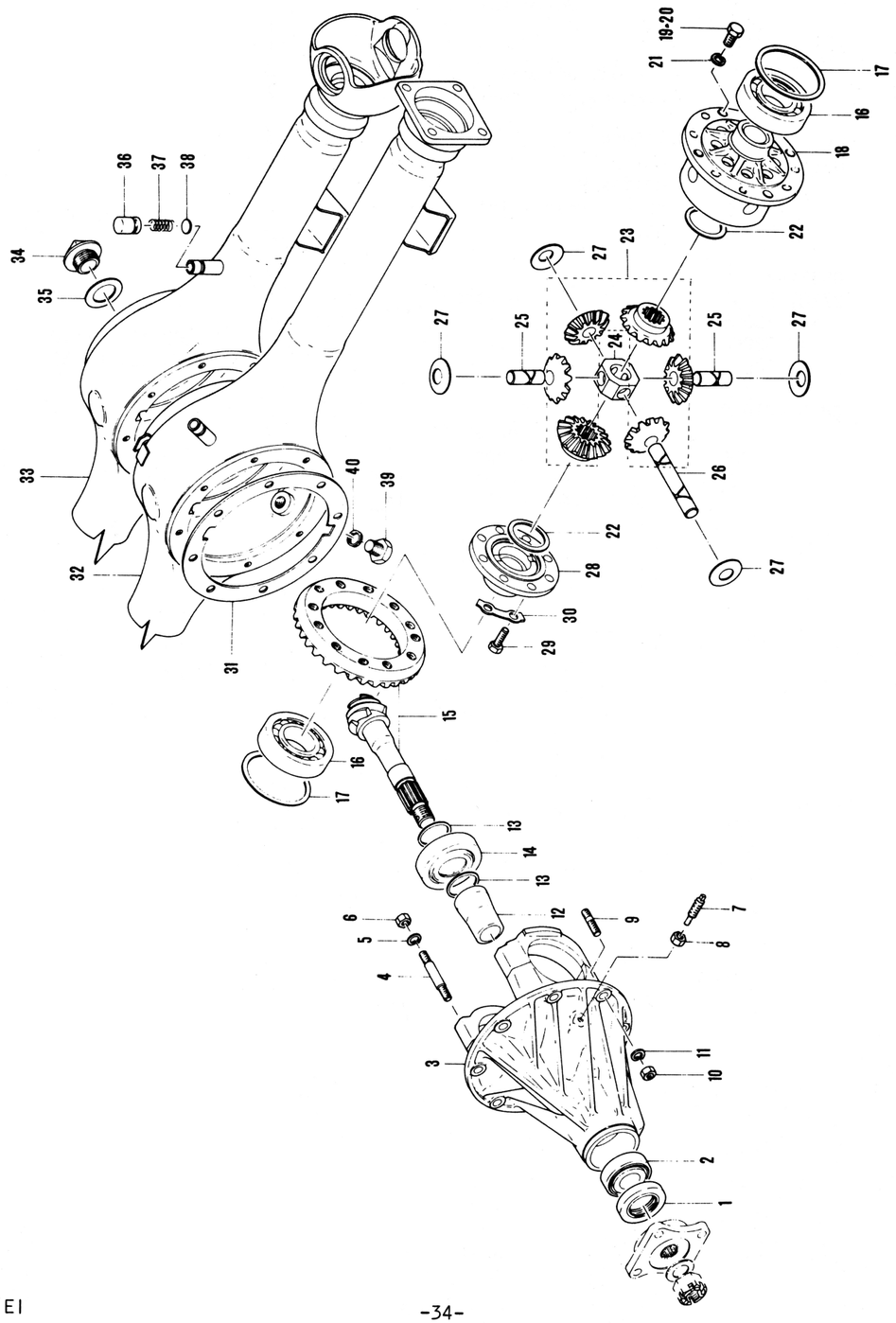

Ref.No.	Part No.	Description	Q'ty	Remarks
1	09283-28007	OIL SEAL, drive bevel pinion	2	
2	09265-20004	BEARING	2	
3	27400-63807	CARRIER SET, differential	2	
4	09108-08021	·STUD BOLT	8	
5	08321-31088	·LOCK WASHER	8	
6	08312-11088	·NUT	8	
7	27322-63001	THRUST BOLT	2	
8	08312-31148	NUT	2	
9	09108-08025	STUD BOLT	16	
10	08312-11088	NUT	16	
11	08321-21088	LOCK WASHER	16	
12	27315-63000	SPACER, drive bevel pinion	2	L:37.5
13-1	09181-26001	SHIM (1)	AR	26x32.5x0.3
13-2	09181-26002	SHIM (2)	AR	26x32.5x0.03
13-3	09181-26003	SHIM (3)	AR	26x32.5x0.5
13-4	09181-26004	SHIM (4)	AR	26x32.5x0.05
13-5	09181-26005	SHIM (5)	AR	26x32.5x0.1
14	09265-25007	BEARING	2	
15	27302-63803	PINION SET, drive bevel gear	2	
16	08110-62070	BEARING, differential side	4	
17-1	09181-62003	SHIM (1)	AR	62x71.5x0.1
17-2	09181-62004	SHIM (2)	AR	62x71.5x0.3
17-3	09181-62005	SHIM (3)	AR	62x71.5x0.5
17-4	09181-62006	SHIM (4)	AR	62x71.5x0.15
18	27411-63002	CASE, differential LH	2	
19	09100-10065	BOLT	4	10x18.3
20	09100-10066	BOLT	20	10x17.3
21	09162-10001	LOCK WASHER	24	
22-1	08221-30405	THRUST WASHER (1)	AR	T:0.5
22-2	09160-30009	THRUST WASHER (2)	AR	T:0.8
23	27301-63802	GEAR SET, differential side	2	
24	27356-63000	JOINT, pinion shaft	2	
25	27355-63000	SHAFT, pinion No.2	4	L:37
26	27351-63000	SHAFT, pinion No.1	2	L:89
27	09160-15019	THRUST WASHER	8	ID:15.5, OD:30
28	27421-63000	CASE, differential RH	2	
29	01112-08208	BOLT	16	
30	09169-08007	LOCK WASHER	8	
31	27453-63000	GASKET, differential carrier	2	
32	46510-63011	HOUSING, rear axle	1	
33	46480-63011	HOUSING, front axle	1	
34	09247-25001	PLUG, oil level	2	
35	09168-25001	GASKET, oil level	2	
36	46541-52002	CAP, breather	2	
37	09440-12004	SPRING, breather	2	
38	46542-52000	VALVE, breather	2	
39	09247-12004	DRAIN PLUG	2	
40	09168-12001	GASKET, drain plug	2	12x20x1.0

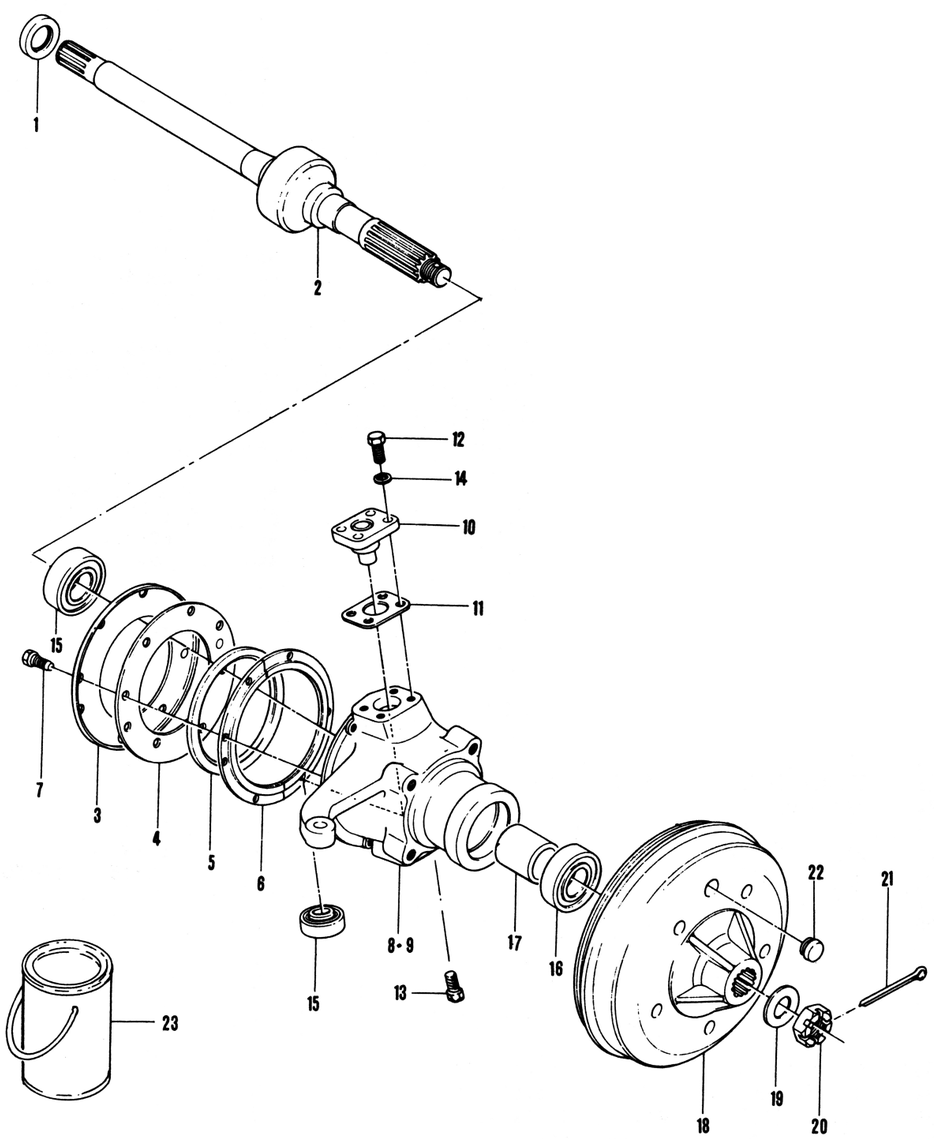

Ref.No.	Part No.	Description	Q'ty	Remarks
1	09283-26010	OIL SEAL	2	26x38x7
2	44101-63011	JOINT ASSY, front axle shaft	2	
3	45625-63001	COVER, oil seal	4	
4	45624-63001	PAD	2	
5	09285-00002	OIL SEAL	2	95x112x4.5
6	45623-63000	RETAINER, oil seal	4	
7	45626-63000	BOLT, joint seal	16	
8	45111-63000	KNUCKLE, steering RH	1	
9	45151-63000	KNUCKLE, steering LH	1	
10	45610-63000	KING PIN ASSY	4	
11-1	45621-63000	SHIM, king pin (1)	AR	T:0.5
11-2	45622-63000	SHIM, king pin (2)	AR	T:0.1
12	01122-08258	BOLT, king pin upper	8	
13	01122-08208	BOLT, king pin lower	8	
14	08321-31088	LOCK WASHER	16	
15	09265-15002	BEARING, king pin	4	
16	08133-62060	BEARING, front wheel	4	
17	09180-30009	SPACER, front wheel		
18	43511-63000	DRUM, front brake	2	L:40
19	09160-24011	WASHER	2	20x42x3.2
20	09141-24001	NUT	2	
21	04111-40458	COTTER PIN	2	
22	09250-15002	PLUG, brake adjusting hole	2	
23	99000-25040	SUZUKI SUPER GREASE D	1	OPT

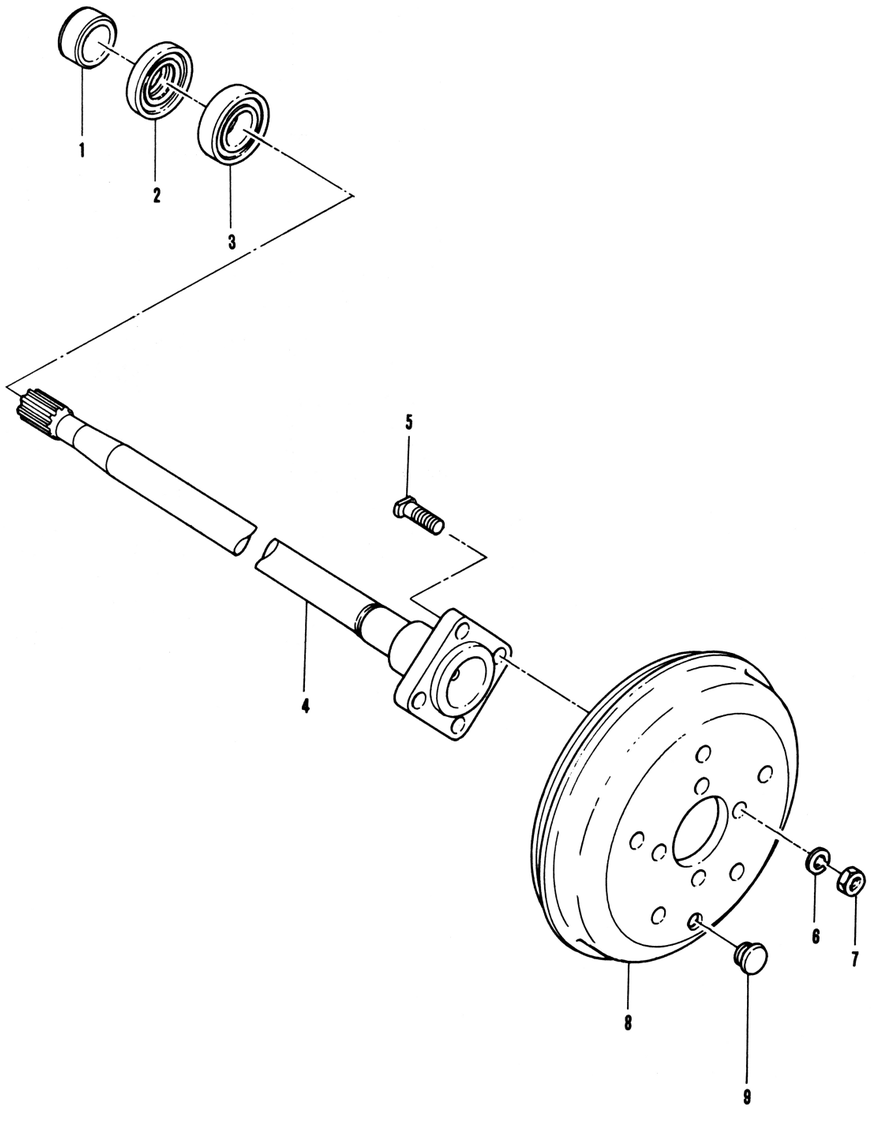

REAR AXLE

Ref.No.	Part No.	Description	Q'ty	Remarks
1	43485-60001	RETAINER RING, bearing	2	30x42x20
2	09283-42005	OIL SEAL	2	42x55x7.5
3	09262-30012	BEARING, rear wheel	2	30x62x16
4	44112-60002	SHAFT, rear axle	2	
5	09119-12003	BOLT, rear hub	8	L:33.5
6	08321-31128	LOCK WASHER	8	
7	08312-11128	NUT	8	
8	43551-63001	DRUM, rear brake	2	
9	09250-15002	PLUG, brake adjusting hole	2	

LJ10 E1 -36-

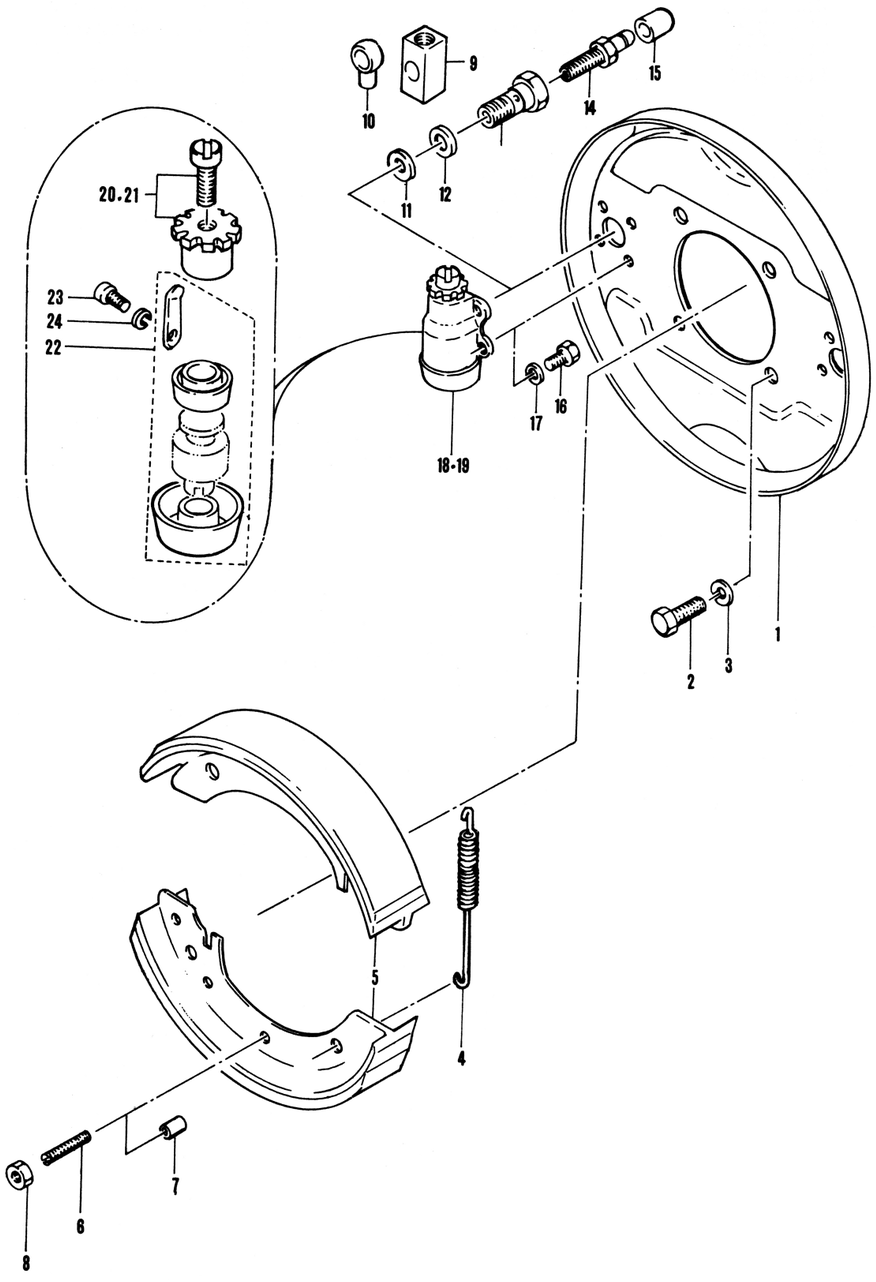

Ref.No.	Part No.	Description	Q'ty	Remarks
1	52111-55011	PLATE, front backing	2	
2	01122-08207	BOLT	8	
3	08321-31038	LOCK WASHER	8	
4	52231-55010	SPRING, brake shoe return	4	
5	52210-55010	SHOE COMP, brake	4	
6	52241-52010	BOLT, adjusting	4	
7	52241-52010	CAP, bolt	7	
8	08311-11068	NUT	4	
9	52471-55011	UNION, wheel cylinder (1)	2	
10	52481-52010	UNION, wheel cylinder (2)	2	
11	52475-52010	GASKET, union bolt (1)	4	10x16x1.2
12	52476-52010	GASKFT, union bolt (2)	4	12x16x1.2
14	52474-51010	VALVE, cap	4	
15	52473-51010	PLUG, breather	4	
16	01112-06128	BOLT	16	
17	08321-31068	LOCK WASHER	16	
18	52401-55011	CYLINDER ASSY, right wheel	2	
19	52402-55011	CYLINDER ASSY, left wheel	2	
20	52450-52873	·SLEEVE SET, adjusting (1)	2	Left Screw
21	52550-52872	·SLEEVE SET, adjusting (2)	2	Right Screw
22	52400-55841	·PISTON CUP BOOT SET	4	
23	02111-04068	·SCREW	4	
24	08321-21048	·LOCK WASHER	4	

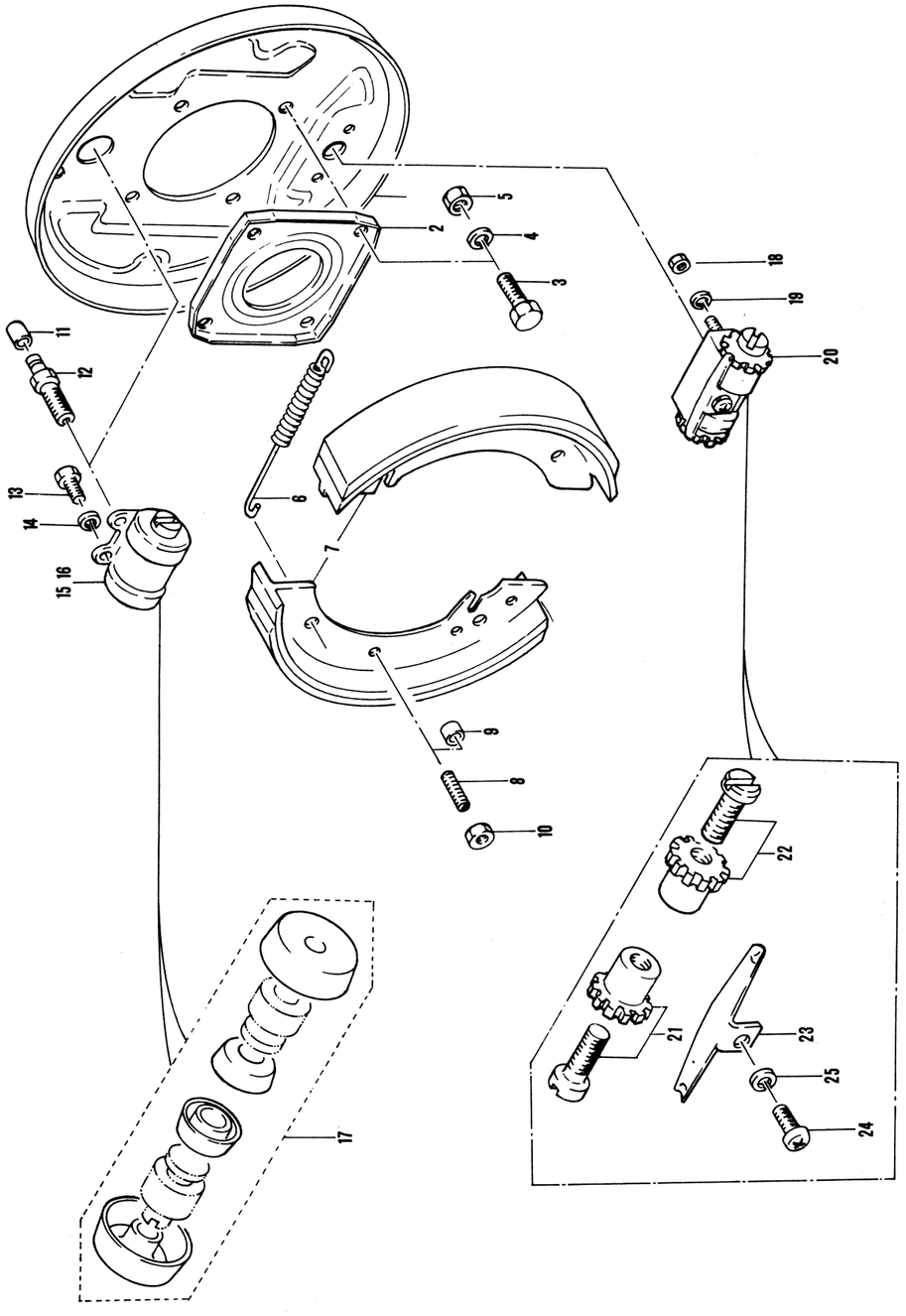

Ref.No.	Part No.	Description	Q'ty	Remarks
2	53821-60010	RETAINER, bearing outer	2	
3	53811-60010	BOLT	8	
4	08321-31088	LOCK WASHER	8	
5	08312-11088	NUT	8	
6	52231-55010	SPRING, brake shoe return	4	
7	52210-55010	SHOE COMP, brake	4	
8	52241-52010	BOLT, adjusting	4	
9	52242-55010	CAP, bolt	4	
10	08311-11068	NUT	4	
11	52474-60010	CAP, brether plug	2	
12	52473-60010	PLUG, breather	2	
13	01112-06128	BOLT	4	
14	08321-31068	LOCK WASHER	4	
15	53401-60010	CYLINDER ASSY, right wheel	1	
16	53402-60010	CYLINDER ASSY, left wheel	1	
17	52400-60806	•PISTON CUP BOOT SET	2	
18	08312-11088	NUT	4	
19	08321-21088	LOCK WASHER	4	
20	53610-63040	ANCHOR ASSY, brake shoe	2	
21	52450-52873	•SLEEVE SET, adjusting (1)	2	Left Screw
22	52550-52872	•SLEEVE SET, adjusting (2)	2	Right Screw
23	53631-52011	•LOCK SPRING	2	
24	02111-04068	•SCREW	2	
25	08321-21048	•LOCK WASHER	2	

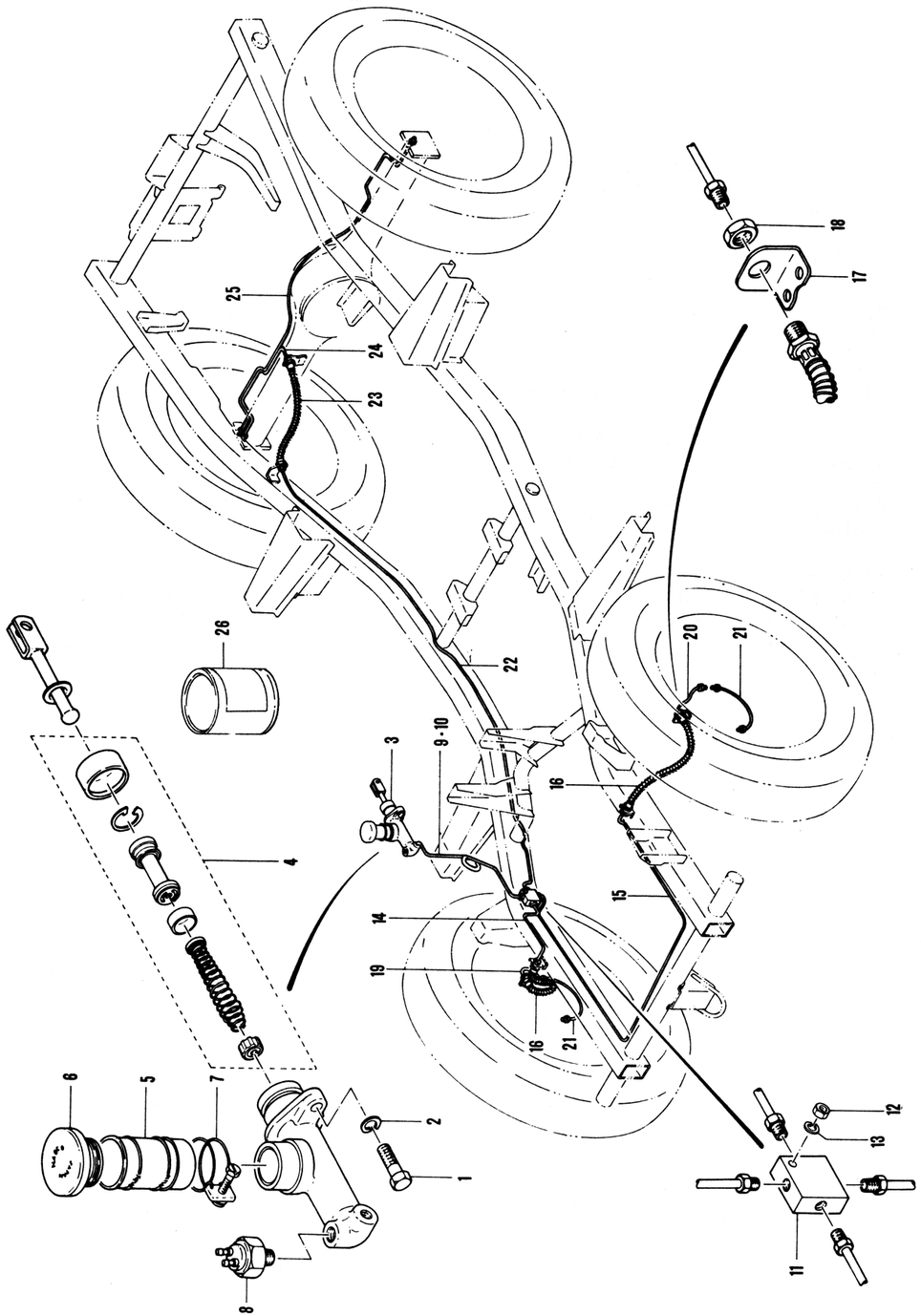

BRAKE PIPING

Ref.No.	Part No.	Description	Q'ty	Remarks
1	01122-08307	BOLT	2	
2	08321-21088	LOCK WASHER	2	
3	51100-52010	CYLINDER ASSY, master	1	
4	51100-63817	·PISTON KIT, master cylinder	1	
5	51211-52010	·RESERVER, master cylinder	1	
6	51220-52012	·CAP COMP, reserver	1	
7	51233-52010	·BAND, reserver set	1	
8	37740-51010	·SWITCH ASSY, stop lamp	1	
9	51400-63833	PIPE, brake (1)	1	RHD
10	51410-63610	PIPE, brake (1)	1	LHD
11	51630-52020	JOINT COMP, 4way	1	
12	08311-11068	NUT	1	
13	08321-31068	LOCK WASHER	1	
14	51420-63010	PIPE, brake (2)	1	L:200
15	51430-63011	PIPE, brake (3)	1	L:1450
16	51540-60031	FLEXIBLE HOSE, front brake	2	
17	51711-63000	BRACKET, front brake hose	2	
18	09140-16007	NUT	6	
19	51440-63010	PIPE, brake (4)	1	L:230
20	51450-63010	PIPE, brake (5)	1	L:230
21	51460-63010	PIPE, brake (6)	2	L:260
22	51470-63010	PIPE, brake (7)	1	L:1900
23	51560-61031	FLEXIBLE HOSE, rear brake	1	
24	51480-63010	PIPE, brake (8)	1	L:600
25	51480-61010	PIPE, brake (9)	1	L:730
26	99000-23020	SUZUKI BRAKE FLUIDE A	1	NET:1ℓ

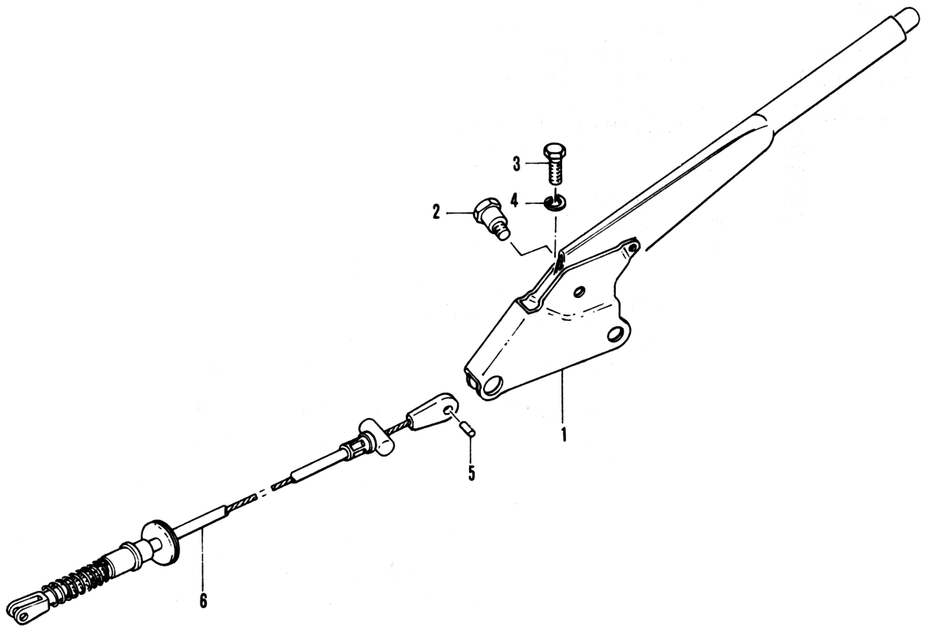

PARKING BRAKE

Ref.No.	Part No.	Description	Q'ty	Remarks
1	54500-63001	LEVER ASSY, parking	1	
2	54551-63000	BOLT	1	
3	01121-08168	BOLT	1	
4	08321-21088	LOCK WASHER	2	
5	09202-06003	PIN, parking cable	1	
6	54640-63011	CABLE COMP, parking	1	L:410

LJ10 E1 -40-

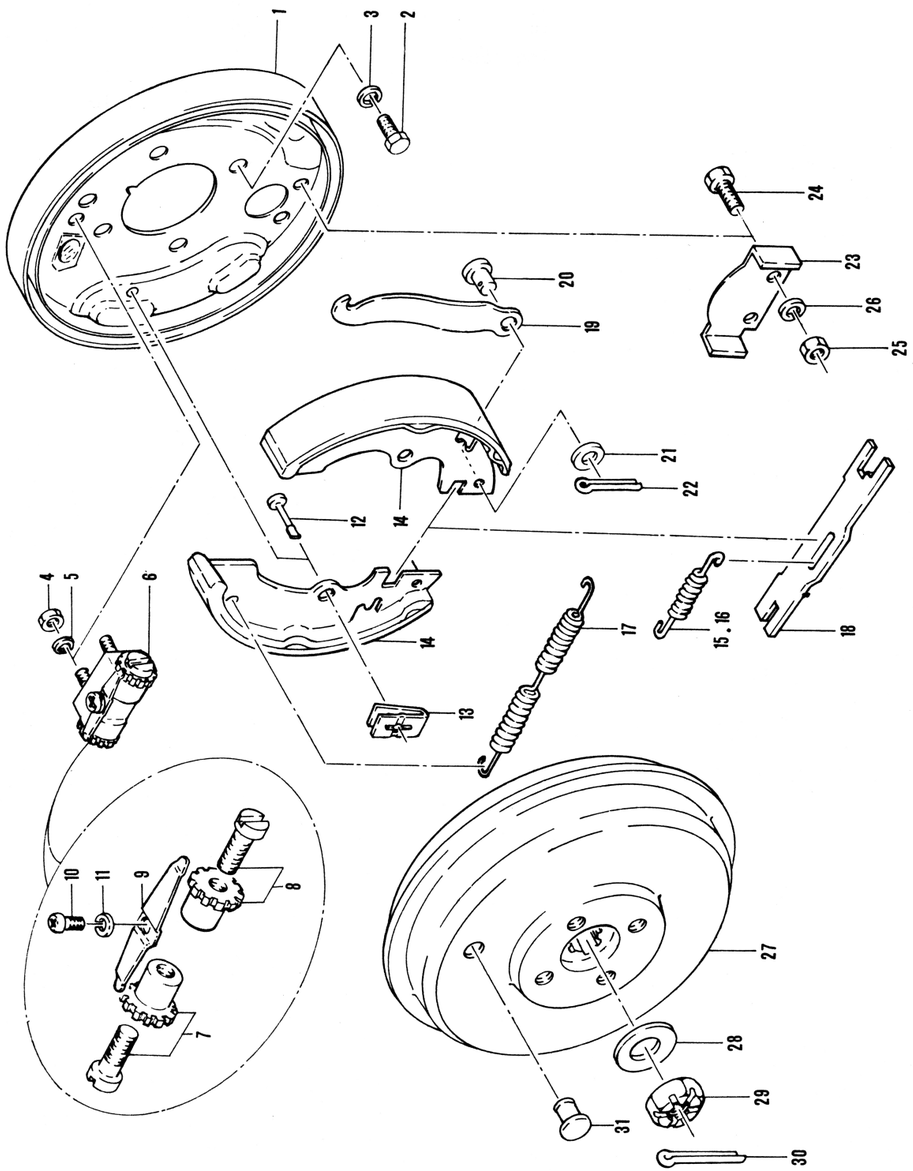

CENTER BRAKE DRUM

Ref.No.	Part No.	Description	Q'ty	Remarks
1	53101-60010	PLATE, center brake back	1	
2	01122-08207	BOLT	4	
3	08321-31088	LOCK WASHER	4	
4	08312-11088	NUT	2	
5	08321-31088	LOCK WASHER	2	
6	53610-60010	ANCHOR ASSY, brake shoe sub	1	
7	52450-52873	·SLEEVE SET, adjusting (1)	1	Left Screw
8	52550-52872	·SLEEVE SET, adjusting (2)	1	Right Screw
9	53631-52011	·LOCK SPRING, adjuster	1	
10	02111-04068	·SCREW	1	
11	08321-21048	·LOCK WASHER	1	
12	52241-60010	PIN, brake shoe hold	2	
13	52243-60010	SPRING, brake shoe hold	2	
14	52210-60010	SHOE COMP, brake	2	
15	53235-60010	SPRING, return (1)	1	
16	53236-60010	SPRING, return (2)	1	
17	53231-60010	SPRING, return B	1	
18	53711-60010	STRUT, brake shoe parking	1	
19	53721-52010	LEVER, parking	1	
20	53731-52010	PIN, parking lever	1	
21	53242-52010	WASHER	1	
22	04111-25158	COTTER PIN	1	
23	54741-63011	COVER, hole	1	
24	01112-06128	BOLT	2	
25	08311-11068	NUT	2	
26	08321-31068	LOCK WASHER	2	
27	43581-63000	DRUM, center brake	1	
28	09160-14009	WASHER	1	
29	08314-41148	NUT	1	
30	04111-30308	COTTER PIN	1	
31	09250-15002	PLUG, brake adjusting hole	1	

LJ10 E1 -41-

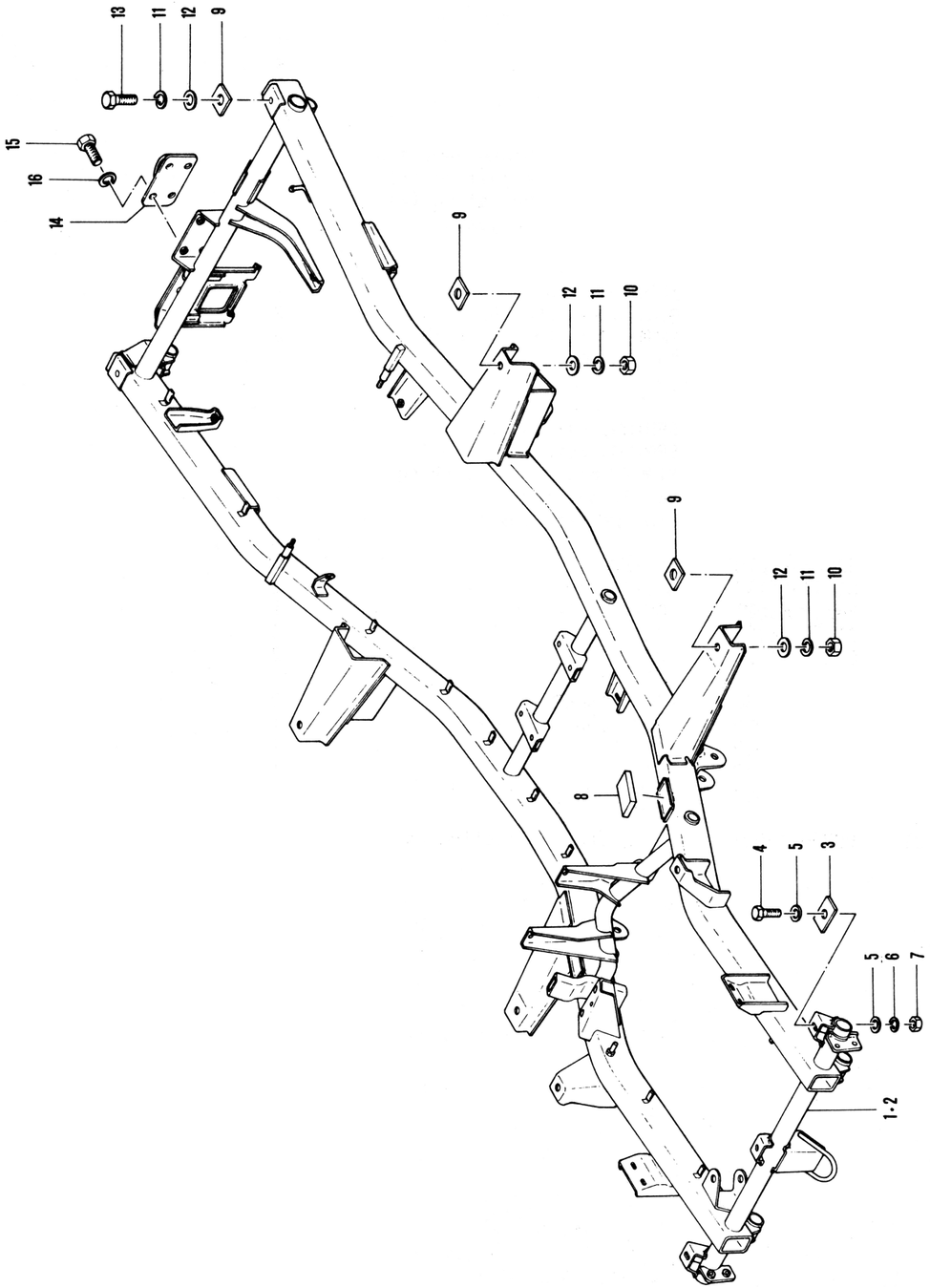

SHASSIS FRAME

Ref.No.	Part No.	Description	Q'ty	Remarks
1	56000-63002	FLAME ASSY	1	RHD
2	56000-63610	FLAME ASSY	1	LHD
3	57311-63000	PAD, first mounting	3	
4	01122-08307	BOLT	3	
5	09160-08025	WASHER	6	
6	08321-21088	LOCK WASHER	3	
7	08312-11088	NUT	3	
8	57321-63000	PAD, front floor	2	
9	57321-52000	PAD, body mounting	10	
10	09159-10001	NUT	2	
11	08321-21108	LOCK WASHER	6	
12	09160-10002	WASHER	8	
13	01122-10308	BOLT	6	
14	57260-63000	HOOK COMP, rear	1	
15	01122-10258	BOLT	4	
16	08321-21108	LOCK WASHER	4	

LJ10 E1 -42-

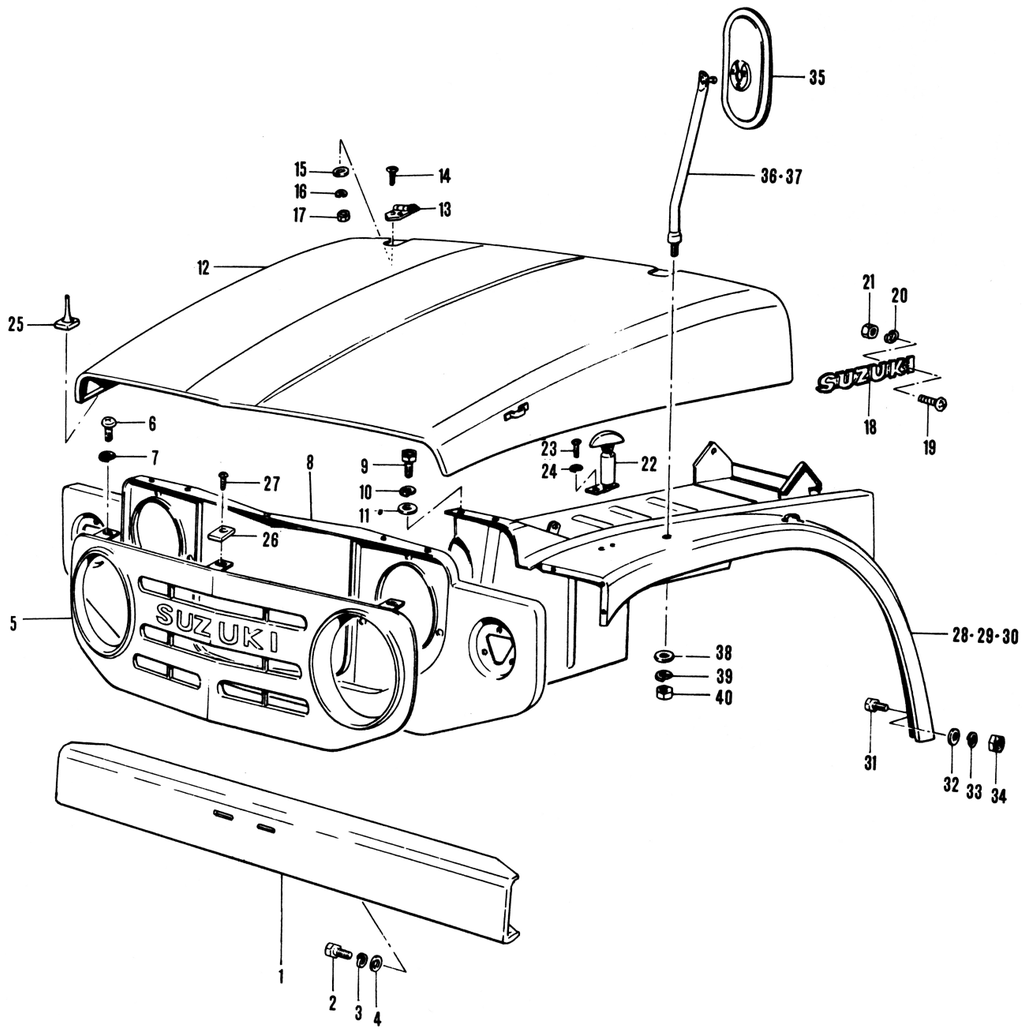

Ref.No.	Part No.	Description	Q'ty	Remarks
1	57410-63610-072	BUMPER COMP, front	1	
2	01122-08168	BOLT	4	
3	08321-21088	LOCK WASHER	4	
4	08322-21088	WASHER	4	
5	61111-63001	PANEL, front grille	1	
6	01112-06128	BOLT	3	
7	08321-21068	LOCK WASHER	3	
8	61210-63700	PANEL COMP, front	1	
9	01112-06128	BOLT	8	
10	08321-21068	LOCK WASHER	8	
11	09160-06006	WASHER	8	
12	61310-63601	PANEL COMP, front hood	1	
13	61410-63000	HINGE COMP, front	2	
14	02122-06128	SCREW	8	
15	09160-06019	WASHER	4	
16	08321-21068	LOCK WASHER	4	
17	08311-11068	NUT	4	
18	68111-97000	EMBLEM, suzuki	1	
19	02111-06087	SCREW	2	
20	08321-21048	LOCK WASHER	2	
21	08311-11048	NUT	2	
22	61510-63000	LOCK COMP, front hood	2	
23	02111-06128	SCREW	4	
24	08321-21068	LOCK WASHER	4	
25	09321-10008	STOPPER, front hood	4	
26	61372-63001	STOPPER, front hood center	1	
27	02111-06128	SCREW	1	
28	61710-63001	PANEL COMP, front fender RH	1	
29	61760-63004	PANEL COMP, front fender LH	1	RHD
30	61760-63610	PANEL COMP, front fender LH	1	LHD
31	01112-06127	BOLT	20	
32	08322-21068	WASHER	20	
33	08321-21068	LOCK WASHER	20	
34	08311-11068	NUT	18	
35	86150-63030	MIRROR COMP, rear view	2	
36	86120-63000	STAY, rear view mirror RH	1	
37	86140-63000	STAY, rear view mirror LH	1	
38	08322-11128	WASHER	2	
39	08321-21128	LOCK WASHER	2	
40	08313-11128	NUT	2	

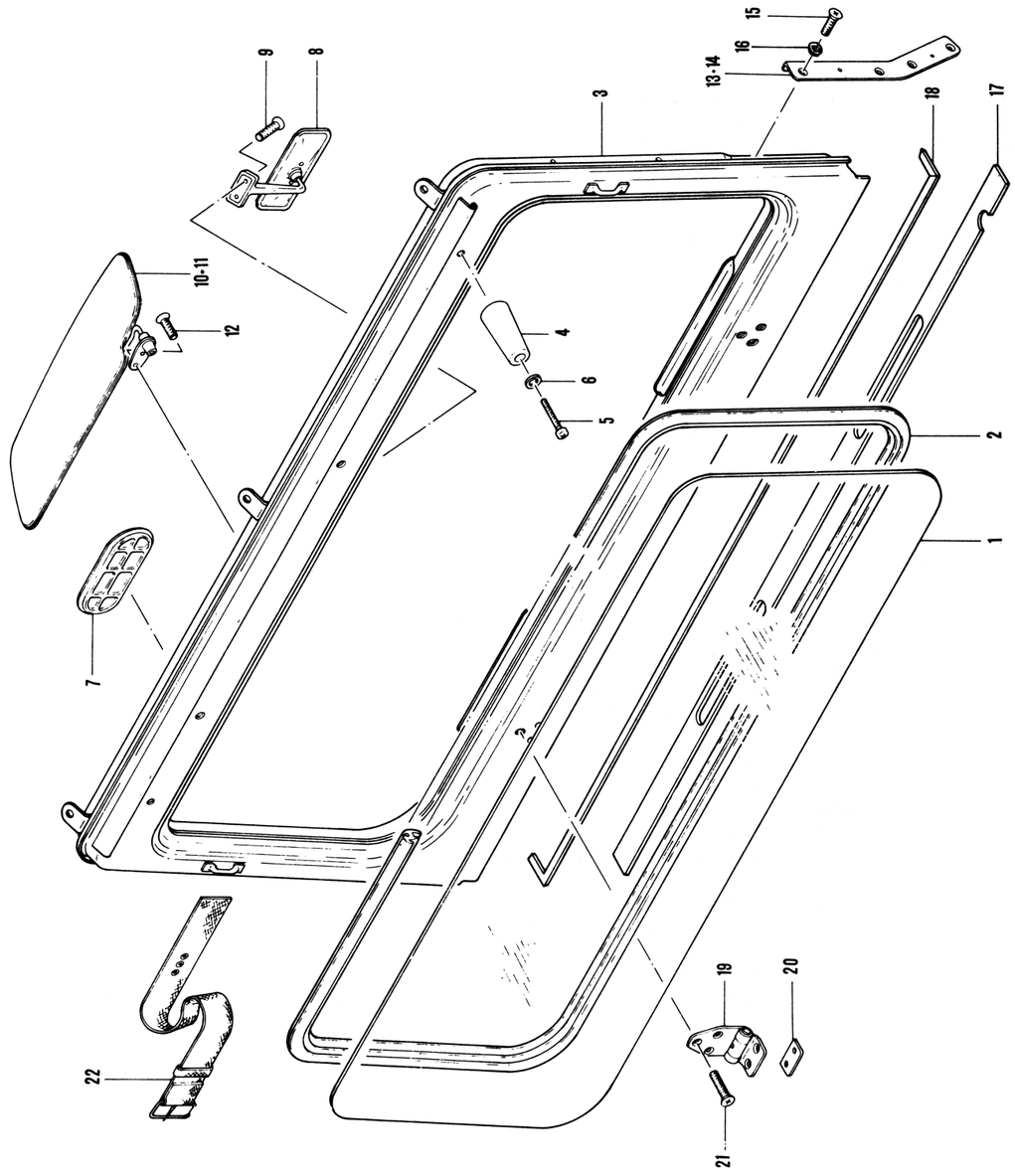

FRONT WINDOW

Ref.No.	Part No.	Description	Q'ty	Remarks
1	63111-63002	GLASS, front window	1	Ref. No.2 both used
2	63121-63002	WEATHERSTRIP, front window	1	
3	63300-63002	WINDOW ASSY, front	1	
4	63221-63000	CUSHION, front window	2	
5	02111-05357	SCREW	2	
6	08322-21058	WASHER	2	
7	63131-63000	CAP, wiper arm hole	1	
8	86103-58010	MIRROR ASSY, rear view inside	1	
9	02131-05107	SCREW	2	
10	87401-63040	SUN VISOR ASSY, RH	1	RHD
11	87402-63600	SUN VISOR ASSY, LH	1	LHD
12	02131-05127	SCREW	2	
13	63225-63000	STOPPER, front window RH	4	
14	63226-63000	STOPPER, front window LH	4	
15	02122-06168	SCREW	8	
16	08322-31068	WASHER	8	
17	63222-63000	SEAT, front window	1	
18	63227-63000	WEATHERSTRIP, front window	1	
19	63210-63000	HINGE, front window	2	
20	63223-63000	GASKET, front window hinge	2	
21	02122-06168	SCREW	10	
22	93510-63701	BELT, front window	2	OPT

LJ10 E1 -44-

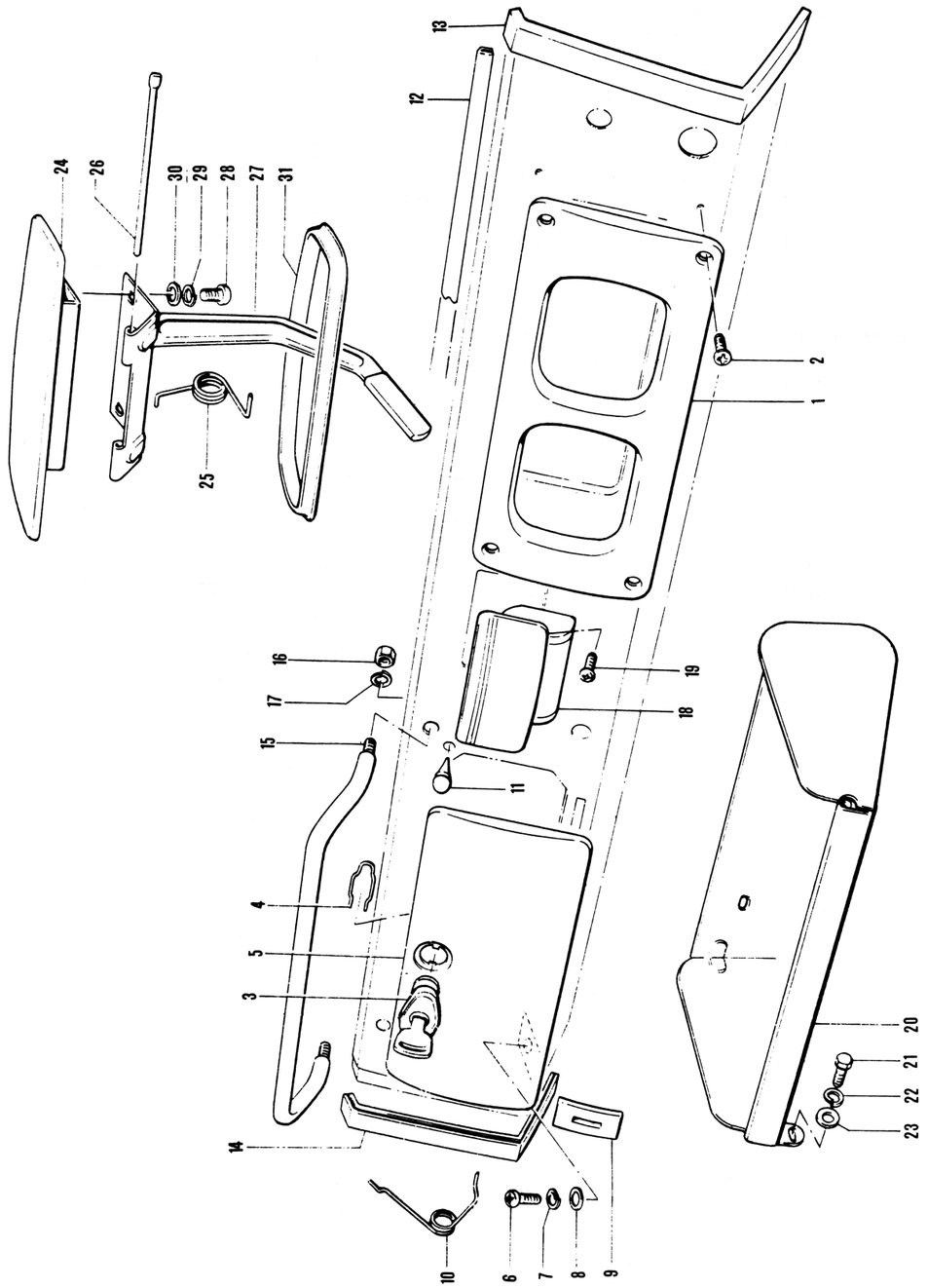

Ref.No.	Part No.	Description	Q'ty	Remarks
1	62450-63000	PANEL COMP, meter hood	1	
2	02131-05127	SCREW	4	
3	62500-63851	LOCK KEY ASSY, lid	1	
4	09384-22001	CLIP	1	
5	62530-63000	LID COMP, glove box	1	
6	02111-05108	SCREW	2	
7	08321-21058	LOCK WASHER	2	
8	08322-21058	WASHER	2	
9	62522-58100	RUBBER, glove box stay	1	
10	62536-63000	SPRING, glove box lid	1	
11	09321-05005	CUSHION, lid	2	
12	62674-63600	MOULDING,instrument upper	1	L:1070
13	62672-63000	MOULDING,instrument side RH	1	
14	62673-63000	MOULDING,instrument side LH	1	
15	86210-63000	GRIP, assistant	1	
16	08311-11068	NUT	2	
17	08321-21068	LOCK WASHER	2	
18	86370-55040	ASH TRAY	1	
19	02131-04128	SCREW	2	
20	87610-63010	TRAY COMP, front package	1	
21	01112-06167	BOLT	4	
22	08321-21068	LOCK WASHER	4	
23	09160-06006	WASHER	4	
24	62810-58001	DOOR COMP, cowl ventilator	1	
25	09448-28001	SPRING	1	
26	63281-58000	HINGE PIN	1	
27-1	63270-63001	HINGE COMP, cowl ventilator	1	L:260
27-2	63270-63000	HINGE COMP, cowl ventilator	1	L:220, B.No.~20623
28	01111-05108	BOLT	2	
29	08321-21058	LOCK WASHER	2	
30	08322-21058	WASHER	2	
31	62911-58000	WEATHERSTRIP, cowl ventilator	1	

LJ10 EI -45-

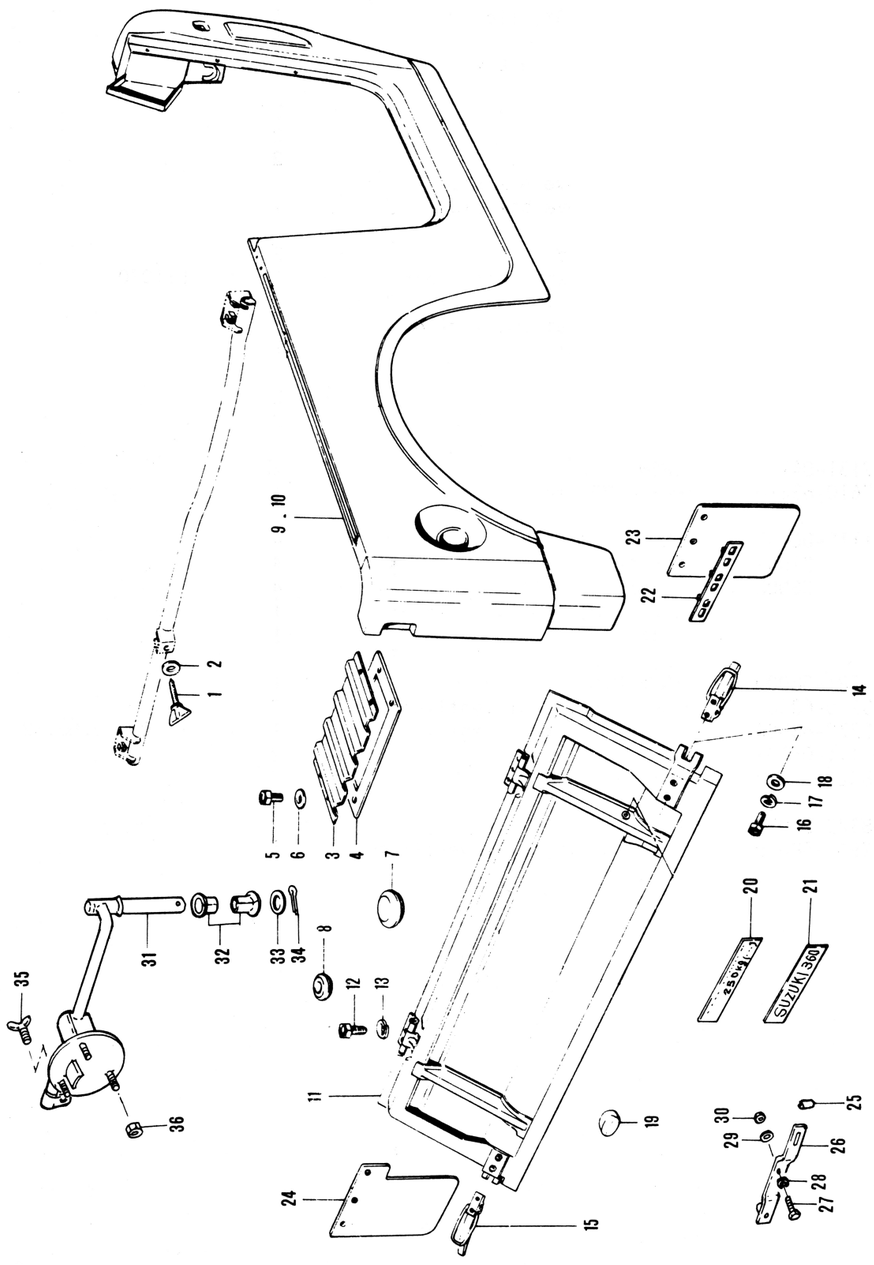

Ref.No.	Part No.	Description	Q'ty	Remarks
1	57221-63001	BOLT, spare tire	1	} RHD
2	08322-11128	WASHER	1	
3	65631-63001	COVER, survice hole	1	
4	65632-63001	PAD, survice hole cover	1	
5	01111-06108	BOLT	4	
6	08322-21068	WASHER	4	
7	09250-20002	CAP, rear floor	2	OD:20
8	09250-40002	CAP, rear floor	2	OD:40
9	68201-63002	PANEL ASSY, side body RH	1	
10	68202-63002	PANEL ASSY, side body LH	1	
11	73700-63613	GATE COMP, rear	1	
12	01131-06128	BOLT	6	
13	08321-21068	LOCK WASHER	6	
14	73910-52000	HANDLE, rear gate lock RH	1	
15	73920-52000	HANDLE, rear gate lock LH	1	
16	01112-06168	BOLT	4	
17	08321-21068	LOCK WASHER	4	
18	09160-06006	WASHER	4	6.5x18x1.6
19	73951-63000	STOPPER, rear gate	2	
20	86961-63600	EMBLEM, load indicator	1	
21	86962-52300	EMBLEM, SUZUKI	1	
22	57681-61100	PLATE, flap atouching	2	
23	57661-61100	FLAP, rear mud RH	1	
24	57662-63700	FLAP, rear mud LH	1	
25	56948-63600	CUSHION, licence plate	4	
26	56940-63600	STAY, licence plate	1	
27	01112-06167	BOLT	2	
28	08321-21068	LOCK WASHER	2	
29	08322-11068	WASHER	2	
30	08311-11068	NUT	2	
31	57220-63610	CARRIER COMP, spare tire	1	
32	57251-63610	BUSH	2	
33	57252-63610	WASHER	1	} LHD
34	04111-40558	COTTER PIN	1	
35	57252-63610	BOLT, spare tire	1	
36	09140-12013	NUT, spare tire	1	

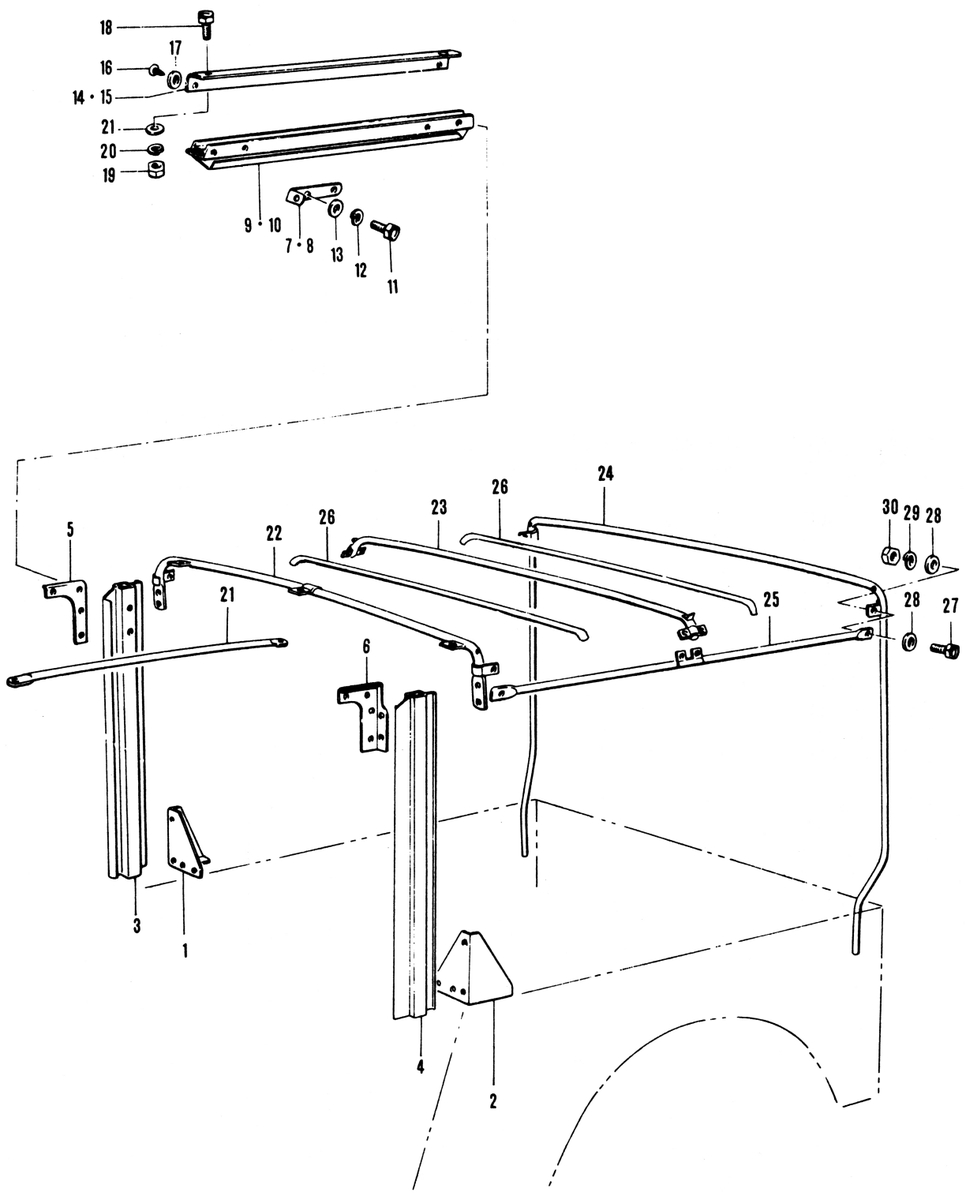

Ref.No.	Part No.	Description	Q'ty	Remarks
1-1	67313-63001	BRACKET, center pillar RH	1	
1-2	67313-63000	BRACKET, center pillar RH	1	
2-1	67363-63001	BRACKET, center pillar LH	1	
2-2	67363-63000	BRACKET, center pillar LH	1	B.No.~20709
3	68530-63001	PILLAR COMP, center RH	1	
4	68580-63001	PILLAR COMP, center LH	1	
5	57312-63000	BRACKET, roof side rail RH	1	
6	67362-63000	BRACKET, roof side rail LH	1	
7	67311-63000	BRACKET, front RH	1	
8	67361-63000	BRACKET, front LH	1	
9	68310-63002	RAIL, roof side RH	1	
10	68360-63002	RAIL, roof side LH	1	B.No.~15500
11	01112-06127	BOLT	26	
12	08321-21068	LOCK WASHER	26	
13	08322-21068	WASHER	26	
14	68331-63001	RAIL, deck top front side RH	1	
15	68381-63001	RAIL, deck top front side LH	1	
16	03141-04108	SCREW	8	
17	01112-06127	BOLT	4	
18	08311-11068	NUT	4	
19	08321-21068	LOCK WASHER	4	
20	08322-21068	WASHER	4	
21	71610-63030	RAIL COMP, front top	1	
22	71620-63030	TOP BOW, front cross	1	
23	71650-63030	TOP BOW, middle cross	1	
24	71660-63030	TOP BOW, rear cross	1	
25	71630-63030	RAIL, rear side (1)	2	
26	71642-63030	RAIL, rear side (2)	2	
27	01112-06167	BOLT	10	
28	08322-21068	WASHER	20	
29	08321-21068	LOCK WASHER	10	
30	08311-11068	NUT	8	

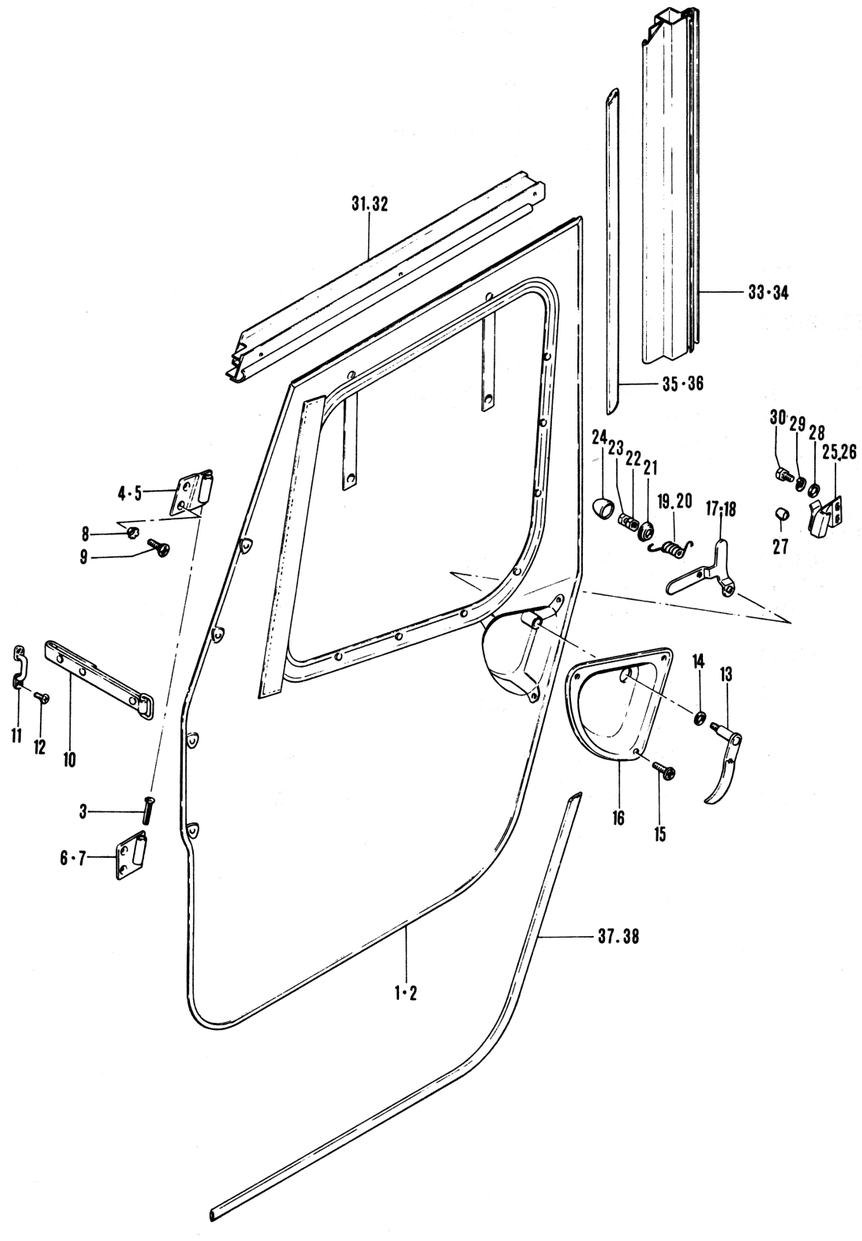

Ref.No.	Part No.	Description	Q'ty	Remarks
1	79001-63024	DOOR ASSY, RH	1	
2	79002-63024	DOOR ASSY, LH	1	
3	79118-63001	DOOR PIPE	4	
4	76111-63001	HINGE MALE, upper RH	1	
5	76112-63001	HINGE MALE, upper LH	1	
6	76151-63001	HINGE MALE, lower RH	1	
7	76152-63001	HINGE MALE, lower LH	1	
8	08323-31068	LOCK WASHER	8	
9	02121-06168	SCREW	8	
10	76180-63021	STOPPER, door open	2	
11	68442-63000	HOOK, door open stopper	2	
12	02111-05168	SCREW	4	
13	78210-63002	HANDLE, door outer	2	
14	09164-13002	WAVE WASHER	2	
15	02141-04107	SCREW	6	
16	79119-63001	COVER, lock bracket	2	
17	78231-63003	HANDLE, door inner RH	1	
18	78241-63003	HANDLE, door inner LH	1	
19	78232-63000	SPRING, door handle RH	1	
20	78242-63000	SPRING, door handle LH	1	
21	09169-07004	WASHER	2	
22	08311-11068	NUT	2	
23	08311-21068	NUT	2	
24	79811-63000	CAP, door handle	2	
25	77811-63001	STRIKER, door lock RH	1	
26	77812-63001	STRIKER, door lock LH	1	
27	09344-06002	PIPE, handle stopper	2	
28	08322-11068	WASHER	4	
29	08321-21068	LOCK WASHER	4	
30	01112-06127	BOLT	4	
31	68310-63002	RAIL, roof side RH	1	
32	68360-63002	RAIL, roof side LH	1	
33	68530-63001	PILLAR, center RH	1	
34	68580-63001	PILLAR, center LH	1	
35	79212-63001	WEATHERSTRIP, upper RH	1	
36	79222-63001	WEATHERSTRIP, upper LH	1	
37	79211-63001	WEATHERSTRIP RH	1	
38	79211-63001	WEATHERSTRIP LH	1	

DOOR CURTAIN (OPT)

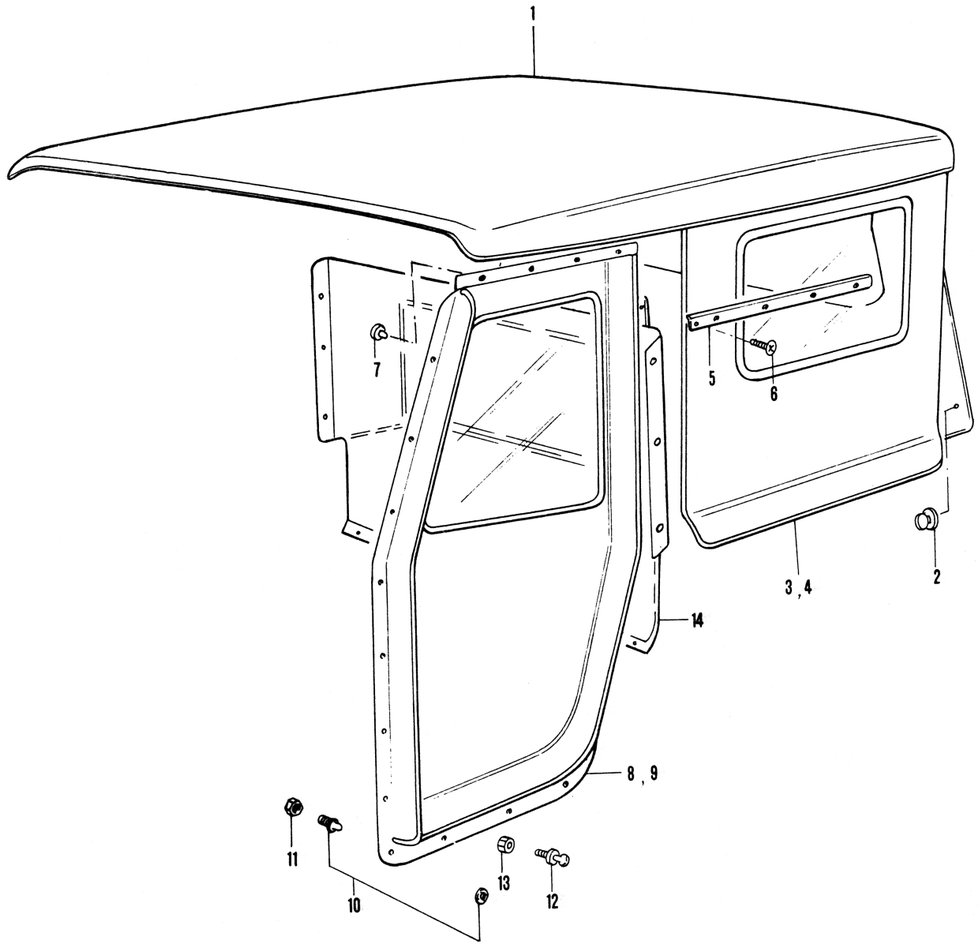

DOOR CURTAIN (OPT)

Ref.No.	Part No.	Description	Q'ty	Remarks
1	71500-63021	DECK TOP ASSY	1	
2	71529-63020	·HOOD, rear cross	10	
3	71530-63020	CURTAIN, quarter RH	1	
4	71550-63020	CURTAIN, quarter LH	1	
5	79132-63000	PLATE, curtain door	2	
6	03141-04088	SCREW	2	
7	79131-63000	CLIP	8	
8	79101-63021	CURTAIN, door window RH	1	B.No.∿15500
9	79102-63021	CURTAIN, door window LH	1	
10	79100-63808	HOOD SET, door curtain	12	
11	08311-11048	NUT	12	
12	79136-63020	CLAMP, door curtain	6	
13	08311-11068	NUT	6	B.No.∿15500
14	93410-63821	CURTAIN,center	1	

LJ10 EI -49-

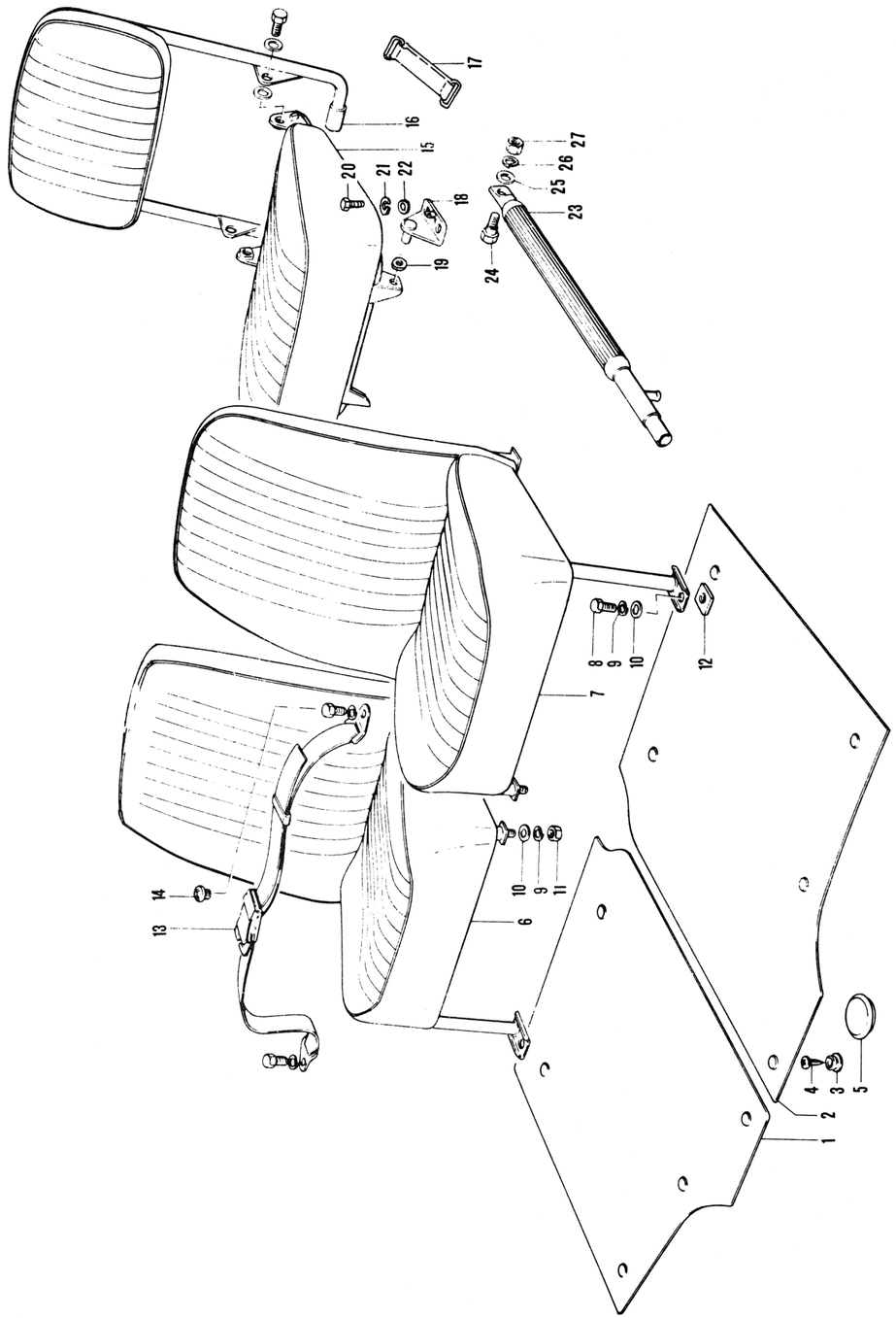

Ref.No.	Part No.	Description	Q'ty	Remarks
1	66111-63000-405	FLOOR MAT, RH	1	
2	66121-63000-405	FLOOR MAT, LH	1	
3	66291-51000	MALE, floor mat	10	
4	09131-04001	SCREW, floor mat male	10	
5	09250-40002	CAP, floor	6	
6	80001-63620-357	SEAT ASSY, front RH	1	
7	80002-63620-357	SEAT ASSY, front LH	1	
8	01122-08168	BOLT	2	
9	08321-21088	LOCK WASHER	8	
10	08322-21088	WASHER	8	
11	08312-11088	NUT	6	
12	81921-63000	PLATE, seat stopper	2	
13	87301-63021-382	SEAT BELT ASSY	1	OPT
14	09250-10004	PLUG, seat belt	2	
15	83001-63020	CUSHION ASSY, spare seat	1	
16	83004-63020	BACK ASSY, spare seat	1	
17	09462-00019	BAND, spare seat stopper	2	
18	84311-63000	HINGE, spare seat	2	
19	09161-09001	WASHER, hinge	2	
20	01112-06128	BOLT	4	
21	08321-21068	LOCK WASHER	4	
22	08322-21068	WASHER	4	
23	75900-63000	BAR ASSY, front gate	2	
24	09111-06013	BOLT	2	
25	09160-07006	WASHER	2	7x14x1.6
26	08321-21068	LOCK WASHER	2	
27	08311-11068	NUT	2	

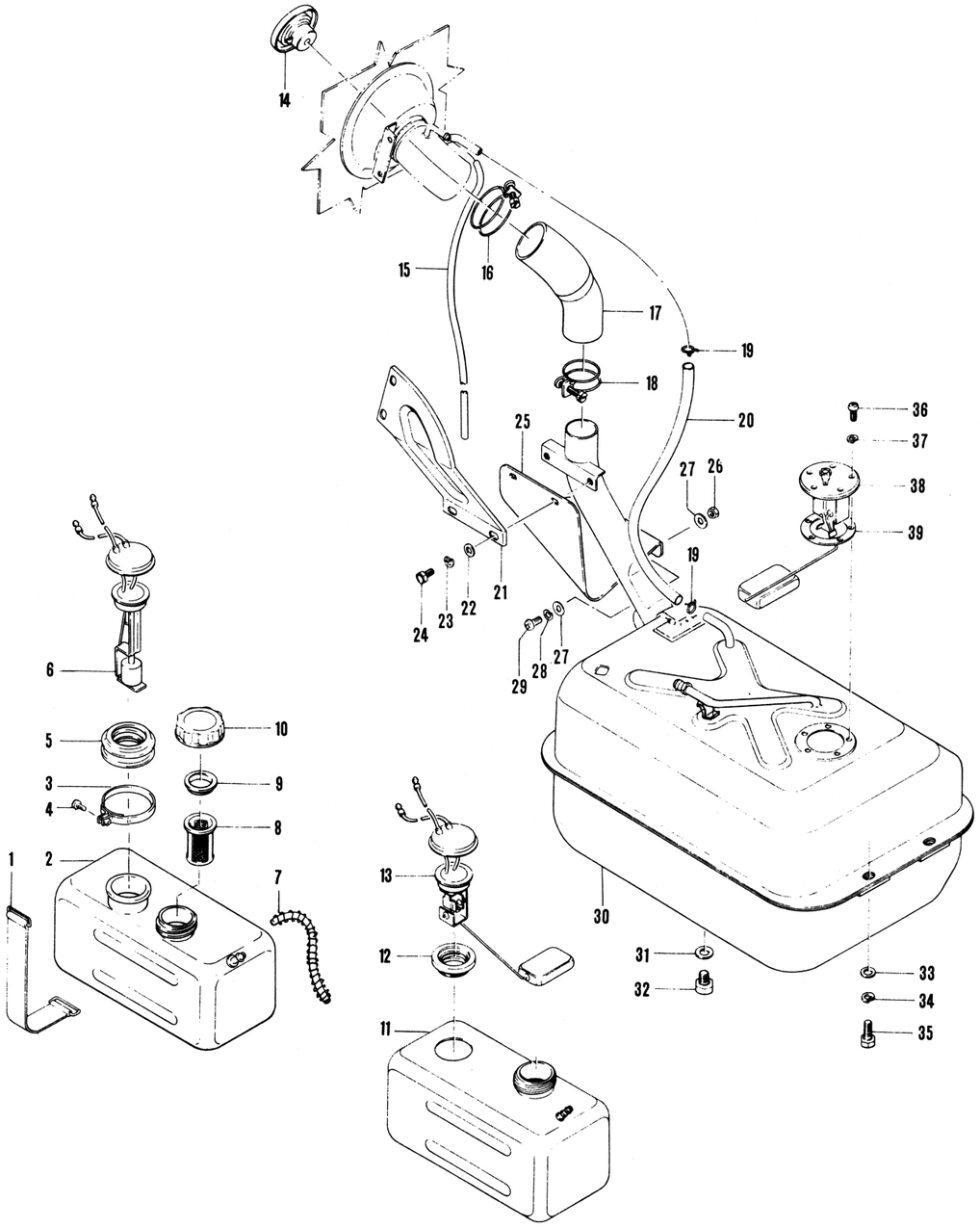

Ref.No.	Part No.	Description	Q'ty	Remarks
1	09462-00036	BAND, engine oil tank	2	
2	85511-63001	TANK, engine oil	1	
3	09402-00170	CLAMP	1	
4	02111-04168	SCREW	1	
5	85674-60001	GASKET, oil level gauge	1	
6	34830-62011	GAUGE ASSY, oil level	1	
7	85680-63001	HOSE, oil tank breather	1	L:460
8	85731-58070	FILTER, oil tank	1	
9	85673-58070	GASKET, cap	1	
10	85711-60002	CAP, oil tank	1	
11	85510-63000	TANK COMP, engine oil	1	B.No.~21509
12	85674-51001	GASKET, oil level gauge	1	B.No.~21509
13	34830-51013	GAUGE ASSY, oil level	1	B.No.~21509
14-1	85410-64003	CAP, fuel tank	1	
14-2	85410-59700	CAP, fuel tank	1	OPT(W/LOCK KEY)
15	85382-63000	HOSE, breather (2)	1	
16	09400-60301	CLAMP (1)	1	
17	85372-63000	PIPE, fuel joint	1	
18	09400-53301	CLAMP (2)	1	
19	09401-11401	CLAMP, breather hose	2	
20	85381-63000	HOSE, breather(1)	1	L:500
21	85461-63000	PROTECTOR	1	
22	08322-11068	WASHER	4	
23	08321-21068	LOCK WASHER	4	
24	01112-06128	BOLT	4	
25-1	85462-63001	PROTECTOR, fuel inlet pipe	1	
25-2	85462-63000	PROTECTOR, fuel inlet pipe	1	B.No.~22018
26	08311-11068	NUT	2	
27	08322-11068	WASHER	4	
28	08321-21068	LOCK WASHER	2	
29	02112-06168	SCREW	2	
30	85381-63001	TANK ASSY, fuel	1	
31	09168-12001	GASKET	1	
32	09247-12101	PLUG, fuel tank	1	
33	08322-11088	WASHER	3	
34	08321-21088	LOCK WASHER	3	
35	01122-08207	BOLT	3	
36	02111-05127	SCREW	5	
37	09168-05001	WASHER	5	
38	34810-62010	GAUGE ASSY, fuel level	1	
39	34825-51010	•GASKET, fuel level gauge	1	

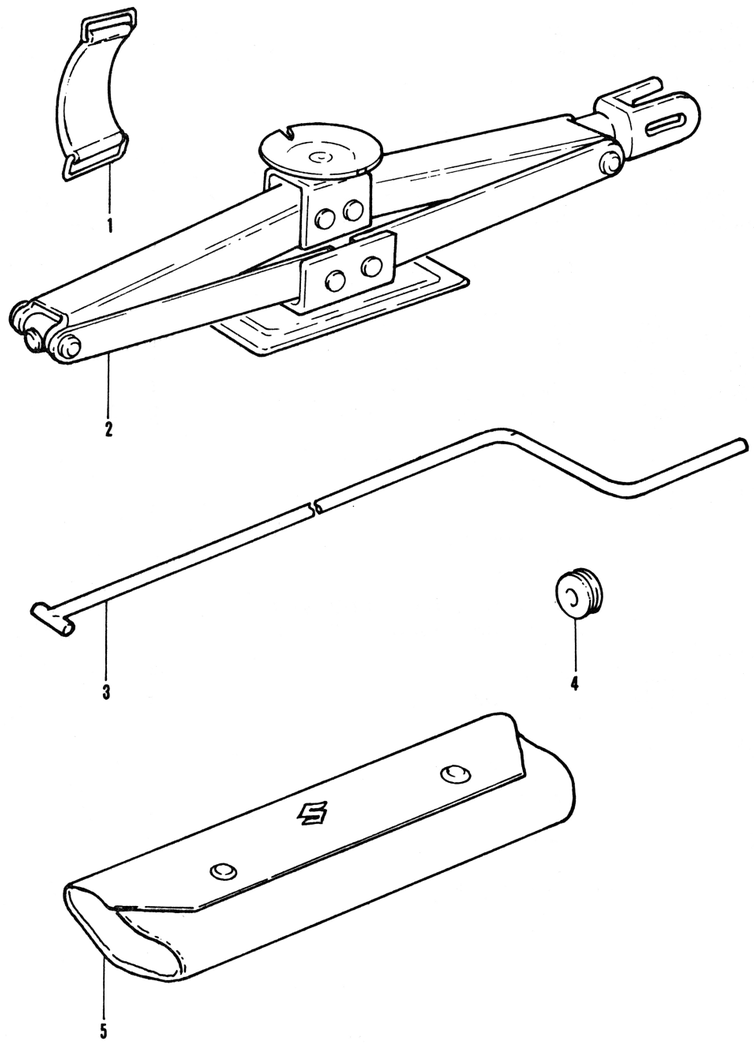

SPARE TOOL

Ref.No.	Part No.	Description	Q'ty	Remarks
1	09462-00015	BAND, jack	1	
2	09824-00012	JACK ASSY	1	
3	09824-00010	HANDLE, jack	1	
4	09308-12002	GROMMET, jack handle	1	
5	09800-00130	TOOL ASSY	1	

LJ10 E1

-52-

PARTS NUMBER INDEX

Listed hear are the Parts Number Index for LJ10.

PARTS NUMBER INDEX

LJ10

Part No.	Page-Ref.No.	Part No.	Page-Ref.No.	Part No.	Page-Ref.No.
10000					
11111-61401	1-02	13228-60040	5-07	16905-61030	9-19
11121-61400	1-03	13229-60040	5-06	16907-61030	9-20
11141-52540	1-04-1	13251-62040	5-08	17210-53000	10-06
11141-52740	1-04-2	13252-62040	5-11	17215-61000	10-07
11210-61400	1-08	13274-62040	5-04	17221-61000	10-12
11220-61400	1-09	13275-62040	5-01	17230-61000	10-14
11231-61030	1-14	13278-62040	5-03	17240-61000	10-19
11232-61030	1-15	13370-62040	5-10	17260-61000	10-23
11233-61030	1-16	13389-62040	5-02	17280-52500	10-28
11241-52510	1-10	13391-62040	5-09	17340-63600	7-01
11300-63809	1-17	13470-62040	5-12	11111-61401	
11351-52502	10-01	13683-51010	19-04		
11359-52001	10-05	13700-63601	6-14		
11610-59020	2-08	13780-60011	6-15		
11630-59001	2-01	13840-63051	6-08		
11640-63000	2-05	13850-63661	6-02		
11741-63000	2-15	13870-63051	6-07		
11951-52600	1-29	13878-63010	6-01		
12002-61812	3-06	13881-63001	6-19		
12110-52301	3-01-1	14110-61000	7-02		
12110-52710	3-01-2	14141-61410	7-03		
12110-52720	3-01-3	14150-63001	7-10		
12140-61841	3-02-1	14170-63001	7-29		
12140-61842	3-02-2	14181-52000	7-11		
12140-61843	3-02-3	14301-63042	7-14		
12151-51030	3-03	14302-63041	7-24		
12161-51000	3-15	14721-63002	7-34		
12211-51030	3-12	14731-63003	7-35		
12211-61030	3-11	14741-59030	7-38		
12221-52002	3-07	15100-63010	8-15		
12222-61000	3-08-2	15197-51010	8-16		
12222-61001	3-08-1	15198-51010	8-17		
12231-51001	3-13	15310-63000	8-14		
12232-61000	3-09-2	15410-58030	8-03		
12232-61001	3-09-1	15420-63000	8-05		
12240-61001	3-10-2	15429-65000	8-04		
12240-61002	3-10-1	15810-63013	8-01		
12243-61000	3-17	15814-61000	8-23		
12310-52541	3-24	15910-63010	19-01		
12320-52541	3-25	15910-63610	19-02		
12511-51000	3-26	15930-63010	19-15		
12621-61000	3-35	15930-63610	19-16		
13111-61004	4-01	16101-61818	9-01		
13121-51002	4-02	16385-55000	9-06		
13125-61000	4-12	16721-58000	9-04		
13130-61000	4-11	16732-52001	9-07		
13150-52510	4-09	16770-61000	9-12		
13156-51000	4-10	16810-61030	9-15		
13192-61003	4-13	16901-61030	9-17		
13200-63043	5-0	16903-61030	9-18		

20000

Part No.	Page-Ref.No.
22100-52011	11-02
22400-63010	11-01
09448-12002	11-06
	11-07
23180-59811	11-08
23260-60000	11-09
23266-52000	11-14
23710-63011	19-43
23710-63610	19-44
23721-63001	19-52
23721-63610	19-53
24110-61001	13-06
24121-61002	13-14
24130-67001	13-26
24211-60003	13-20
24220-60001	13-15
24230-60000	13-13
24400-63805	13-11
24400-63806	17-23
24402-58877	13-18
24431-59040	13-08
24432-58042	13-16
24551-60000	13-29
24560-60000	13-30
25715-60001	12-01
24715-60571	12-34
24725-60020	12-35
24741-60000	12-12
24770-61000	12-18
24781-60000	12-13
24784-60000	12-19
24821-09000	12-29
25100-63001	14-01
25185-60000	14-02
25210-69000	14-10
25220-69000	14-11
25410-63000	14-12
25420-63000	14-13
25450-63002	14-14
25460-60003	14-15
25481-63000	14-18
25711-60000	14-17
26111-59000	17-46
27110-60001	33-04
27110-61000	33-01
27110-63000	33-05
27131-52000	33-09
27140-52000	33-14
27140-58000	33-15
27150-63001	33-19
27153-62020	33-17
27160-63000	33-20
27170-63000	33-18
27201-58833	33-12
27301-63802	34-23
27302-63803	34-15
27315-63000	34-12
27322-63001	34-07
27351-63000	34-26
27355-63000	34-25
27356-63000	34-24
27400-63807	34-03
27411-63002	34-18
27421-63000	34-28
27453-63000	34-31
28110-63002	15-02
28113-63020	15-01
	18-11
28115-58030	15-07
28115-60000	18-16
28116-60000	18-18
28121-60000	18-14
28135-58000	15-03
28135-63020	18-13
28136-58000	15-09
28137-63000	18-02
28138-63000	18-03
28180-58001	15-04
28190-63000	15-10
28250-63001	15-15
28291-65000	15-24
28381-63603	18-01
28710-63611	19-05
	19-06
28771-63000	19-11
28773-61000	19-03
28810-63000	19-27
28810-63610	19-54
28825-61000	19-30
28850-63000	19-32
28850-63610	19-55-1
28850-63611	19-55-1
28867-63610	19-58-2
28867-63611	19-58-1
28911-51000	19-36
28913-63000	19-49
28916-63000	19-33
28930-63000	19-18
28930-63610	19-19-2
28930-63611	19-19-1
29111-63000	17-07
29121-63001	17-17
29131-63000	17-11
29141-63001	17-30
29143-63000	17-41
29151-63001	17-22
29211-63000	17-32
29221-63001	17-36
29310-63000	18-22
29314-63000	18-23
29320-63001	18-21
29331-63000	18-19
29332-63000	18-20
29340-63002	18-12
29351-63000	16-12
29411-63000	17-38
29421-63000	17-43
29510-63000	16-23
29520-63001	16-01
29525-63001	16-02
29531-63000	17-04
29532-63000	17-05
29535-63001	17-28
29540-63000	16-17
29545-63000	16-18
29550-63000	16-26
29552-63000	16-27
29610-63021	2-18
	16-31
29620-63000	16-36

30000

Part No.	Page-Ref.No.
31401-53511	20-02
31631-58700	20-04
31635-52010	20-03
31710-52013	20-01
31761-52012	20-08
31763-52010	20-11
31767-58010	20-09
32500-64010	21-17
33100-52510	21-01
33100-52837	22-05
33140-52011	22-06
33250-52010	22-08
33261-52011	22-07
33310-52010	22-04
33321-52012	22-03
33322-52012	22-02
33410-52012	21-12
33418-51012	21-16
33460-52500	21-06
33500-69810	21-03
17299-58001	10-32
33610-64010	21-23
33611-51020	21-24
33710-53011	22-01
33816-65000	21-31
33821-52054	21-30
33821-54150	21-20
33851-52050	21-29
33860-52051	2-23
33881-58002	21-02
34100-58602	23-02
34100-61020	23-01
34173-60010	23-04
34320-60010	23-03
34810-62010	51-38
34825-51010	51-39
34830-51013	51-13
34830-62011	51-06
34910-63031	23-08
34910-63610	23-09
35121-52321	24-02
35142-53022	24-04
35151-52021	24-05
35154-52020	24-07
35157-52020	24-06
35170-53220	24-03
35601-63012	24-08
35603-61110	25-01
35613-58010	24-10
	25-03
35613-58010	25-09
35652-53010	25-02
35612-58010	24-09
35712-54013	25-08
35665-60010	25-05
35665-60010	25-11
35801-61110	25-07
35910-61011	25-16
36210-51011	26-05
36212-51011	26-06
36250-61030	25-13
36410-58012	24-14
36412-60010	24-15
36421-60011	24-18
36425-60010	24-12
36610-63002	26-01-2
36610-63003	26-01-1
36610-63610	26-02-2
36610-63612	26-02-1
36620-63002	26-03
36710-61020	26-08
36717-51024	26-09
36740-64010	26-14
36810-52051	21-04
37110-58011	26-16
37210-58012	26-17
37310-58012	26-18
37400-60011	29-30
37610-58021	12-32
37740-51010	39-08
38101-63822	27-02
38102-63011	27-03
38280-63000	27-01
38310-63040	27-04
38400-63804	28-01-2
38400-63820	28-01-1
38440-61824	28-02
38450-52854	28-03
38480-55011	28-04-2
38480-58110	28-04-1
38490-62806	28-05
38498-58111	28-06
38500-58011	27-08
38610-59010	24-20
39100-63700	28-08

40000

Part No.	Page-Ref.No.
41110-63011	31-01
41230-63000	31-07
41240-63000	31-08
41310-63011	31-02
41331-62020	31-11
41411-61000	31-04
41461-67000	31-18
41462-67000	31-17
41463-52000	31-16
41600-63010	31-22
41700-63010	31-24
41781-52010	31-23
	31-25
42150-61040	31-03
43110-63031	32-01
43120-63030	32-02
43210-63050	32-03
43485-60001	36-01
43511-63000	35-18
43551-63001	36-08
43581-63000	41-27
44101-63011	35-02
44112-60002	36-04
45111-63000	35-08
45151-63000	35-09
45511-63700	31-09
45610-63000	35-10
45621-63000	35-11-1
45622-63000	35-11-2
45623-63000	35-06
45624-63001	35-04
45625-63001	35-03
45626-63000	35-07
46480-63011	34-33
46510-63011	34-32
46541-52002	34-36
46542-52000	34-38
48111-60010	29-01-2
48111-64010	29-01-1
48120-60100	29-02
48141-60000	29-03
48142-60000	29-06
48143-60000	29-07
48144-60000	29-08
48145-60000	29-09
48151-60000	29-12
48152-60000	29-13
48211-63000	29-15-2
48211-63001	29-15-1
48250-70810	30-01

Part No.	Page-Ref.No.
50000	
48262-58000	30-07
48270-52000	30-03
48283-51002	30-06
48310-63000	29-18
48351-63000	29-21
48361-60000	29-20
48381-51040	29-19
48411-61080	29-26
48491-63000	29-25
48600-63040	30-11
48600-63640	30-12
48710-63002	30-22
48710-63610	30-23
48810-63001	30-39
48820-63002	30-40
48820-63001	30-33
48820-63610	30-34
48831-63001	30-35
48836-63001	30-31
	30-37
48850-63001	30-28
48850-63610	30-29
48900-63000	30-20
48900-63610	30-21
51100-52010	39-03
51100-63817	39-04
51211-52010	39-05
51220-52012	39-06
51233-52010	39-07
51400-63833	39-09
51410-63610	39-10
51420-63010	39-14
51430-63011	39-15
51440-63010	39-19
51450-63010	39-20
51460-63010	39-21
51470-63010	39-22
51480-61010	39-25
51480-63010	39-24
51540-60031	39-16
51560-61031	39-23
51630-52020	39-11
51711-63000	39-17
52111-55011	37-01
52210-55010	37-05
	38-07
52210-60010	41-14
52231-55010	37-04
	38-06
52241-52010	37-06
	37-07
	38-08
52241-60010	41-12
52242-51000	19-08
52242-55010	38-09
52243-60010	41-13
52400-55841	37-22
52400-60806	38-17
52401-55011	37-18
52402-55011	37-19
52450-52873	37-20
	38-21
	41-07
52471-55011	37-09
	37-13
52473-51010	37-15
52473-60010	38-12
52474-51010	37-14
52474-60010	38-11
52475-52010	37-11
52476-52010	37-12
52481-52010	37-10
52550-52872	37-21
	38-22
52550-52872	41-08
53101-60010	41-01
	38-01
53231-60010	41-17
53235-60010	41-15
53236-60010	41-16
53242-52010	41-21
53401-60010	38-15
53402-60010	38-16
53610-60010	41-06
53610-63040	38-20
53631-52011	38-23
	41-09
53711-60010	41-18
53721-52010	41-19
53731-52010	41-20
53811-60010	38-03
53821-60010	38-02
54500-63001	40-01
54551-63000	40-02
54640-63011	40-06
54741-63011	41-23
56000-63002	42-01
56000-63610	42-02
56940-63600	46-26
56948-63600	46-25
57220-63610	46-31
57221-63001	46-01
57251-63610	46-32
57252-63610	46-33
57252-63610	46-35
57260-63000	42-14
57311-63000	42-03
57312-63000	47-05
57321-52000	42-09
57321-63000	42-08
57410-63610-072	43-01
57661-61100	46-23
57662-63700	46-24
57681-61100	46-22
60000	
61111-63001	43-05
61210-63700	43-08
61310-63601	43-12
61372-63001	43-26
61410-63000	43-13
61510-63000	43-22
61710-63001	43-28
61760-63004	43-29
61760-63610	43-30
62450-63000	45-01
62522-58100	45-09
62530-63000	45-05
62536-63000	45-10
62500-63851	45-03
62672-63000	45-13
62673-63000	45-14
62674-63600	45-12
62810-58001	45-24
62911-58000	45-31
63111-63002	44-01
63121-63002	44-02
63131-63000	44-07
63210-63000	44-19
63221-63000	44-04
3222-63000	44-17
63223-63000	44-20
63225-63000	44-13
63226-63000	44-14
63227-63000	44-18
63270-63000	45-27-2
63270-63001	45-27-1
63281-58000	45-26
63300-63002	44-03
65631-63001	46-03
65632-63001	46-04
66111-63000-405	50-01
66121-63000-405	50-02
66291-51000	50-03
66311-63000	18-07
66312-63001	18-08
67311-63000	47-07
67313-63000	47-01-2
67313-63001	47-01-1
67361-63000	47-08
67362-63000	47-06
67363-63000	47-02-2
67363-63001	47-02-1
68111-97000	43-18
68201-63002	46-09
68202-63002	46-10
68310-63002	47-09
	48-31
68331-63001	47-14
68360-63002	47-10
	48-32
68381-63001	47-15
68442-63000	48-11
68530-63001	47-03
	48-33
68580-63001	47-04
68580-63001	48-34
70000	
71500-60021	49-01
71529-63020	49-02
71530-63020	49-03
71550-63020	49-04
71610-63030	47-21
71620-63030	47-22
71630-63030	47-25
71642-63030	47-26
71650-63030	47-23
71660-63030	47-24
09320-06006	46-11
73910-52000	46-14
73920-52000	46-15
73951-63000	46-19
75900-63000	50-23
76111-63001	48-04
76112-63001	48-05
76151-63001	48-06
76152-63001	48-07
76180-63021	48-10
77811-63001	48-25
77812-63001	48-26
78210-63002	48-13
78231-63003	48-17
78232-63000	48-19
78241-63003	48-18
78242-63000	48-20
79001-63024	48-01
79002-63024	48-02
79100-63808	49-10
79101-63021	49-08
79102-63021	49-09
79118-63001	48-03
79119-63001	48-16
79131-63000	49-07
79132-63000	49-05
79136-63020	49-12
79211-63001	48-37
79212-63001	48-35
79211-63001	48-38
79222-63001	48-36
79811-63000	48-24

Part No.	Page-Ref.No.
80000	
80001-63620-357	50-06
80002-63620-357	50-07
81921-63000	50-12
83001-63020	50-15
83004-63020	50-16
84311-63000	50-18
85381-63001	51-30
85372-63000	51-17
85381-63000	51-20
85382-63000	51-15
85410-64003	51-14-1
85410-59700	51-14-2
85461-63000	51-21
85462-63000	51-25-2
85462-63001	51-25-1
85510-63000	51-11
85511-63001	51-02
85673-58070	51-09
85674-51001	51-12
85674-60001	51-05
85680-63001	51-07
85711-61002	51-10
85731-58070	51-08
85821-58001	21-26
85822-63000	21-25
86103-58010	44-08
86150-63030	43-35
86120-63000	43-36
86140-63000	43-37
86210-63000	45-15
86370-55040	45-18
86961-63600	46-20
86962-52300	46-21
87301-63021-382	50-13
87401-63040	44-10
87402-63600	44-11
87610-63010	45-20
90000	
93510-63701	44-22
99000-23020	39-26
99000-25040	35-23
00000	
01421-06258	12-14
01421-08208	16-04
01421-08558	16-05
01421-08758	16-06
01421-10308	1-11
01511-06308	8-18
02121-16258	9-13
08110-62070	34-16
08113-62030	13-25
08113-62040	17-06
08113-62040	17-21
08113-62050	3-20
08113-63040	17-08
	17-37
08113-63050	17-27
08133-62060	35-16
08163-62030	13-04
08163-63040	13-23
08164-62070	3-28
08211-10161	17-44
08211-20345	17-34
08221-30405	34-22-1
08312-17251	13-03
08321-21068	46-13
08322-11068	19-45
08331-11395	3-30
08331-21479	17-20
08331-21529	17-09
08331-21629	17-26
08331-31219	13-09-1
08341-31059	3-36
08351-21008	30-41
08351-31008	30-42
09100-04101	7-07
09100-06026	10-24
09100-06036	15-16
09100-06063	19-59-1
09100-06067	14-20
09100-08013	33-10
09100-08065	7-04
09100-08075	30-04
09100-10004	18-28
09100-10056	19-23
09100-10065	34-19
09100-10066	34-20
09100-12111	30-13
09101-12101	30-25
09101-12105	31-10
09108-08021	34-04
09108-08025	34-09
09108-08032	4-14
09108-10002	1-07
09111-06013	50-24
09119-06003	19-38
09119-12003	32-04
09119-12003	36-05
09128-06006	9-08
09131-04001	50-04
09134-06002	19-09
09140-10004	31-05
09140-12011	30-16
09140-12013	32-05
	46-36
09140-16007	39-18
09140-16008	30-32
09140-16008	30-36
09140-24003	3-38
09141-10003	30-43
09141-12001	30-26
09141-24001	35-20
09148-04009	24-13
	25-06
	25-12
09148-04011	24-19
09150-06001	19-48
09159-10001	42-10
09159-10007	1-05
09160-05008	10-04
09160-06003	21-13
09160-06006	43-11
09160-06006	45-23
	46-18
09160-06019	43-15
09160-07006	50-25
09160-08025	42-05
09160-08028	7-22
09160-10002	42-12
09160-14009	33-06
	41-28
09160-15019	34-27
09160-16006	33-02
09160-20011	13-22
09160-20021	17-14
09160-24009	3-16
09160-24011	35-19
09160-30009	34-22-2
09161-09001	50-19
09161-16003	19-31
09162-10001	34-21
09164-08002	19-41
09164-13002	48-14
09164-13003	31-27
09164-17001	31-26
09167-25005	3-37
09168-05001	51-37
09168-06007	9-03
09168-08008	16-11
09168-10007	14-16
09168-10009	9-05
09168-10010	18-29
09168-10012	8-25
09168-12001	34-40
	51-31
09168-14004	16-16
	16-25
09168-20001	17-45
09168-25001	34-35
09169-07002	15-14
09169-07004	48-21
09169-08007	34-30
09180-06018	15-17
	30-02
09180-08038	7-23
09180-08053	15-23
09180-10021	19-34
09180-12035	31-12
09180-20038	17-16
09180-25007	3-21
09180-25025	17-33
09180-25028	17-25
09180-30009	35-17
09180-45001	3-22
09181-26001	34-13-1
09181-26002	34-13-2
09181-26003	34-13-3
09181-26004	34-13-4
09181-26005	34-13-5
09181-62003	34-17-1
09181-62004	34-17-2
09181-62005	34-17-3
09181-62006	34-17-4
09200-06009	19-40
09200-08006	19-28
09202-05012	17-12
09202-06003	40-05
09205-02004	17-47
09205-04003	14-21
	18-24
09209-06017	18-15
09209-13003	19-47
09241-20001	17-18
09241-52002	17-10
09246-16002	12-27
	12-28
09247-12004	34-39
09247-12101	51-32
09247-14001	16-24
09247-14008	16-15
09247-25001	34-34
09250-08001	12-30
09250-10004	50-14
09250-15002	35-22
	36-09
	41-31
09250-20002	46-07
09250-26001	1-30
09250-40002	46-08
	50-05
09260-10001	14-22
	18-25
09261-04006	3-32
09261-05004	3-33
09262-20032	17-39
09262-30010	3-31
09262-30012	36-03
09263-10003	17-29
09263-10003	3-18
09263-17002	13-07
09263-18002	3-05
09263-20010	17-15
09263-24009	3-14
09265-15002	35-15
09265-20004	34-02
09265-25007	34-14
09269-28001	11-05
09280-11002	12-31
09280-19001	17-40
09280-59002	3-23
09282-10001	3-19
09282-17002	13-01
09283-25013	3-39
09283-26010	35-01
09283-28005	12-20
	17-01
	17-19
09283-28007	34-01
09283-32009	17-42
09283-42005	36-02
09283-48002	3-34
09284-12005	11-13
09285-00002	35-05
09285-10001	17-48
09289-41001	3-27
09300-12004	11-12
09300-20004	13-21
09300-20004	17-35
09300-20009	17-13
09300-25005	17-31
09305-13002	31-19
09306-08002	15-18
09306-14004	19-56
09308-05002	28-07
09308-12002	52-04
09309-08001	21-21
09309-09004	21-22
09319-12008	11-11
09319-12011	30-24
09320-03001	19-37
09320-05004	8-19
09320-10006	7-20
09320-10007	7-21
09321-05005	45-11
09321-10008	43-25
09343-05044	8-22
09343-05070	8-09
09343-05084	8-02
09343-06006	8-28
	48-27
09360-06010	9-02
09362-09003	8-26
09380-17004	13-02
09380-22001	13-09
	17-24
09380-25005	33-13
09381-18002	3-04
09381-40001	13-27
09384-22001	45-04
09401-11401	51-19
09401-11402	8-10
	8-24
09388-00004	13-10
09388-00007	13-17
09390-40002	13-05
09390-52003	13-24
09390-72001	3-29
09400-60301	51-16
09400-53301	51-18
09400-14301	8-27
09400-10301	9-16
09402-00119	6-20

Part No.	Page-Ref.No.	Part No.	Page-Ref.No.	Part No.	Page-Ref.No.
09402-00139	6-05				
09402-00164	6-21				
09402-00170	51-03				
09402-00210	6-09				
09403-05303	21-05				
09404-06702	9-14				
	19-17				
	29-35				
09403-00045	12-33				
09410-00027	6-11				
09422-05006	13-12				
09422-05009	13-19				
09440-04001	18-27				
09440-04011	14-24				
09440-07005	14-23				
09440-07005	18-26				
09440-08001	19-46				
09440-12004	34-37				
09440-14008	9-11				
09440-20006	18-17				
09441-41002	15-08				
09443-10008	15-21				
09443-13003	19-35				
09448-18008	11-10				
09448-19003	19-14				
09448-28001	45-25				
09462-00015	52-01				
09462-00019	50-17				
09462-00036	51-01				
09471-12002	24-11				
09471-12002	25-04				
09471-12003	25-14				
	25-17				
09471-12005	26-07				
09471-12006	25-10				
09471-12007	24-16				
09471-12028	23-05				
09481-05001	26-10				
09481-10001	26-11				
09481-15001	26-12				
09481-20001	26-15				
09482-00050	1-01				
09491-22009	5-05				
09492-38001	5-13				
09493-26002	5-15				
09493-80002	5-14				
09800-00130	52-05				
09824-00010	52-03				
09824-00012	52-02				